No. PE-A-6BG1QCG

TCM®

# PARTS CATALOGUE

# DIESEL ENGINE

## ① A-6BG1QC
## ② A-6BG1TQC
## ③ A-6BG1QC02
## ④ A-6BG1QC03
## ⑤ A-6BG1QC05
## ⑥ A-6BG1QC05S
## ⑦ A-6BG1QC06
## ⑧ A-6BG1QC07
## ⑨ A-6BG1QC08
## ⑩ A-6BG1QC09

**ISUZU**

| | | | |
|---|---|---|---|
| ① | A-6BG1QC | Model | E835 (641)<br>L16 (641) |
| ② | A-6BG1TQC | Model | E840 (642)<br>L19 (642) |
| ③ | A-6BG1QC02 | Model | FD60Z8 (STD), FD60Z8 (GE)<br>FD70Z8 (STD), FD70Z8 (GE) |
| ④ | A-6BG1QC03 | Model | FD70Z8 (EXA), FD70Z8 (EXA/GE)<br>FD80Z8 (EXA), FD80Z8 (EXA/GE)<br>FD100Z8 (EXA), FD100Z8(EXA/GE) |
| ⑤ | A-6BG1QC05 | Model | FD35 T8 (STD)<br>FD40 T8 (STD)<br>FD45 T8 (STD)<br>FD50 T8 (STD) |
| ⑥ | A-6BG1QC05S | Model | FD35Z7(T) (US PRODUCTION)<br>FD40Z7(T) (US PRODUCTION)<br>FD45Z7(T) (US PRODUCTION) |
| ⑦ | A-6BG1QC06 | Model | FD35 T8 (EXA, EXE)<br>FD40 T8 (EXA, EXE)<br>FD45 T8 (EXA, EXE)<br>FD50 T8 (EXA, EXE) |
| ⑧ | A-6BG1QC07 | Model | FD35 C8 (STD), FD35 C8 (GE)<br>FD40 C8 (STD), FD40 C8 (GE)<br>FD45 C8 (STD), FD45 C8 (GE) |
| ⑨ | A-6BG1QC08 | Model | FD35 T8 (EXN), FD35 T8 (GE)<br>FD40 T8 (EXN), FD40 T8 (GE)<br>FD45 T8 (EXN), FD45 T8 (GE)<br>FD50 T8 (EXN), FD50 T8 (GE) |
| ⑩ | A-6BG1QC09 | Model | FD80Z8 (STD), FD80Z8 (GE)<br>FD100Z8 (STD), FD100Z8 (GE) |

**TCM CORPORATION**

# ご使用のまえに

このパーツカタログは，TCM ホイールローダおよび フォークリフト のエンジンの構成部品を収録しています。

## 部品ご注文について

部品ご注文の際は，必ず車両の形式・製造番号（号車），エンジンの形式・製造番号（号機），部品番号および注文数を明示してください。車両の製造番号（号車）は車両銘板に，エンジンの製造番号（号機）は，エンジンオイル注入口下のシリンダブロックに打刻しています。

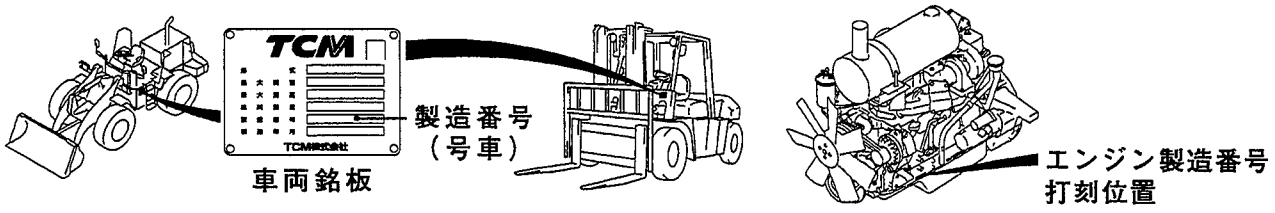


## ご使用について

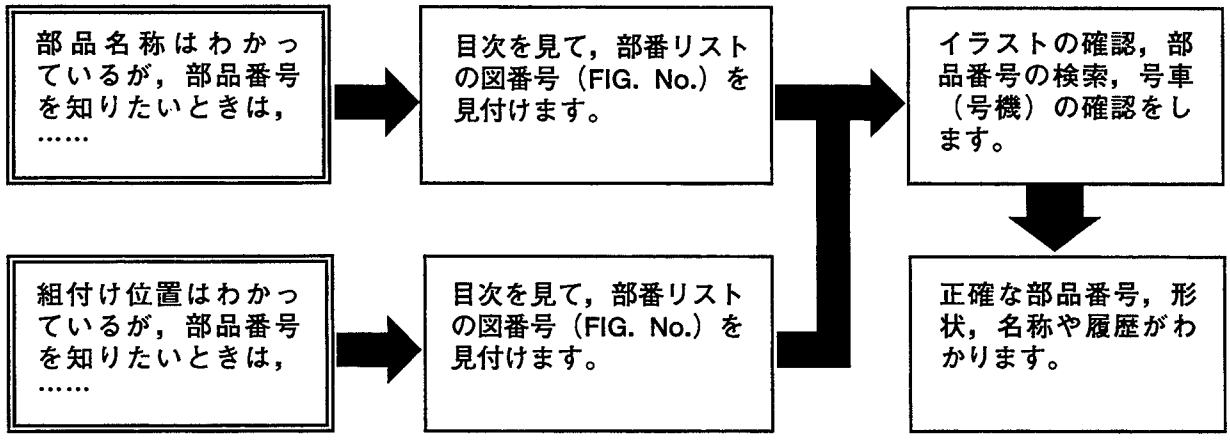


## 略語および記号

| | |
|---|---|
| ＡＳＳＹ | 組立品を示します。 |
| ＡＲ | 必要に応じた数を使用します。 |
| ＳＴＤ | 標準品を示します。 |
| ＊ | セットおよびキットの販売部品を示します。 |
| t | 厚みを示します。 |
| ＧＲＤ | シリンダボディとライナの締め代グレードおよびライナとピストンのすき間グレードを示します。 |
| ＋ | 図示していません。 |
| ＃ | 単体販売しません。 |
| ＧＥ | 大容量ジェネレータ仕様を示します。 |

部品は，品質向上のため予告なく変更することがありますので，あらかじめご了承ください。

# INTRODUCTION

This Parts Catalogue contains the component parts of the engine mounted on **TCM WHEEL LOADER** and **FORKLIFT TRUCK**.

## How to order parts

When ordering, be sure to specify the model name and serial number (machine number), engine type and serial number (engine number) of your machine, as well as the part number and desired quantity for each part. The machine serial number (machine number) is indicated on the machine name plate and the engine serial number (engine number) is punched on the cylinder block under the engine oil filler port.

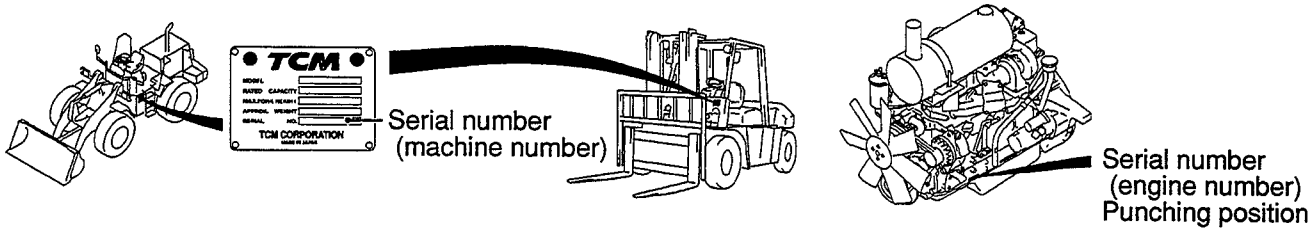


## How to use the Parts Catalogue

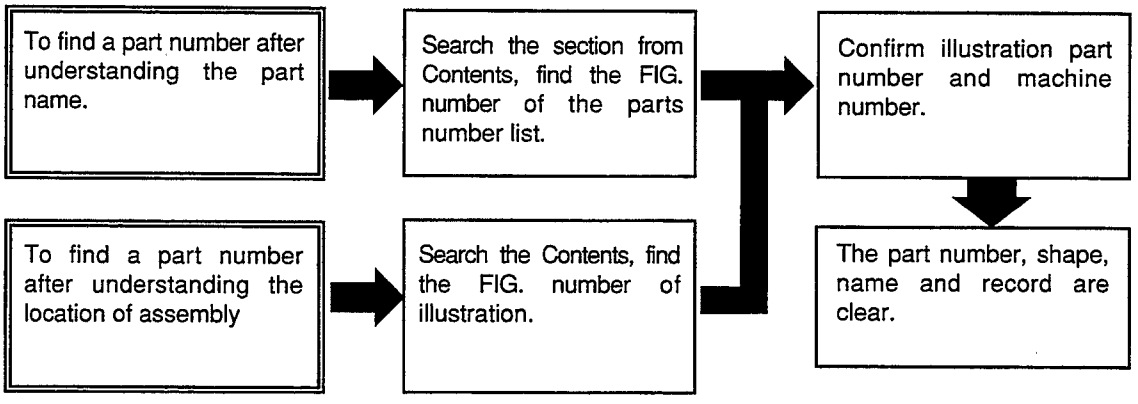


## Abbreviations and symbols

| | |
|---|---|
| ASSY ····· | Assembled unit. |
| AR ····· | Quantity required. |
| STD ····· | Standard part. |
| * ····· | The marketable part set or kit. |
| t ····· | Thickness. |
| GRD ····· | The grade of the tightening allowance between a cylinder body and a liner and the grade of the clearance between a liner and a piston are shown. |
| + ····· | Not illustrated. |
| # ····· | Not sold separately. |
| GE ····· | The specifications of the large-capacity generator are shown. |

Materals and specifications subject to change without notice.

# APPLICABLE MODEL
# 適用機種

| | | | |
|---|---|---|---|
| A | A-6BG1QC | Model | E835 (641)<br>L16 (641) |
| B | A-6BG1TQC | Model | E840 (642)<br>L19 (642) |
| C | A-6BG1QC02 | Model | FD60Z8 (STD), FD60Z8 (GE)<br>FD70Z8 (STD), FD70Z8 (GE) |
| D | A-6BG1QC03 | Model | FD70Z8 (EXA), FD70Z8 (EXA/GE)<br>FD80Z8 (EXA), FD80Z8 (EXA/GE)<br>FD100Z8 (EXA), FD100Z8(EXA/GE) |
| E | A-6BG1QC05 | Model | FD35 T8 (STD)<br>FD40 T8 (STD)<br>FD45 T8 (STD)<br>FD50 T8 (STD) |
| F | A-6BG1QC06 | Model | FD35 T8 (EXA, EXE)<br>FD40 T8 (EXA, EXE)<br>FD45 T8 (EXA, EXE)<br>FD50 T8 (EXA, EXE) |
| G | A-6BG1QC07 | Model | FD35 C8 (STD), FD35 C8 (GE)<br>FD40 C8 (STD), FD40 C8 (GE)<br>FD45 C8 (STD), FD45 C8 (GE) |
| H | A-6BG1QC08 | Model | FD35 T8 (EXN), FD35 T8 (GE)<br>FD40 T8 (EXN), FD40 T8 (GE)<br>FD45 T8 (EXN), FD45 T8 (GE)<br>FD50 T8 (EXN), FD50 T8 (GE) |
| J | A-6BG1QC09 | Model | FD80Z8 (STD), FD80Z8 (GE)<br>FD100Z8 (STD), FD100Z8 (GE) |
| K | A-6BG1QC05S | Model | FD35Z7(T) (US PRODUCTION)<br>FD40Z7(T) (US PRODUCTION)<br>FD45Z7(T) (US PRODUCTION) |

# CONTENTS (1/2)
# 目　　次

A: A-6BG1QC
B: A-6BG1TQC
C: A-6BG1QC02
D: A-6BG1QC03
E: A-6BG1QC05
F: A-6BG1QC06
G: A-6BG1QC07
H: A-6BG1QC08
J: A-6BG1QC09
K: A-6BG1QC05S


| SECTION | 部　門 | FIG.No. 図番号 |
|---|---|---|
| ENGINE BODY | エンジン本体 | |
| CYLINDER BLOCK | シリンダブロック | 1 |
| CHAMBER COVER & BREATHER | チャンバカバー＆ブリーザ | 2 |
| CRANKSHAFT,PISTON & FLYWHEEL | クランクシャフト，ピストン＆フライホイール | 3 |
| GEAR CASE | ギヤーケース | 4 |
| FLYWHEEL HOUSING | フライホイールハウジング | 5 |
| OIL PAN | オイルパン | 6 |
| HEAD & VALVE MECHANISM | ヘッド＆バルブメカニズム | |
| CYLINDER HEAD | シリンダヘッド | 7 |
| VALVE MECHANISM | バルブメカニズム | 8 |
| INLET & EXHAUST | インレット＆エキゾースト | |
| AIR INTAKE & EXHAUST SYSTEM (A) | エアーインテーク＆エキゾーストシステム | 9 |
| AIR INTAKE & EXHAUST SYSTEM (B) | エアーインテーク＆エキゾーストシステム | 10 |
| AIR INTAKE & EXHAUST SYSTEM (C,D,E,F,G,H,J,K) | エアーインテーク＆エキゾーストシステム | 11 |
| TURBO CHARGER (B) | ターボチャージャ | 12 |
| MUFFLER (A,B) | マフラ | 13 |
| LUBRICATION | 潤滑装置 | |
| OIL PIPE | オイルパイプ | 14 |
| OIL PUMP | オイルポンプ | 15 |
| OIL FILTER (A) (-1999.3) | オイルフィルタ | 16 |
| OIL FILTER (A) (1999.4-) | オイルフィルタ | 16A |
| OIL FILTER (B) (-1999.3) | オイルフィルタ | 17 |
| OIL FILTER (B) (1999.4-) | オイルフィルタ | 17A |
| OIL FILTER (C,D,E,F,G,H,J,K) | オイルフィルタ | 18 |
| PARTIAL OIL FILTER (B) (-1999.3) | パーシャルオイルフィルタ | 19 |
| COOLING | 冷却装置 | |
| FAN | ファン | 20 |
| WATER PUMP (A,B,C,D,J) | ウォータポンプ | 21 |
| WATER PUMP (E,F,G,H,K) | ウォータポンプ | 22 |
| THERMOSTAT | サーモスタット | 23 |
| OIL COOLER | オイルクーラ | 24 |
| FUEL | 燃料装置 | |
| INJECTION PIPING | インジェクションパイピング | 25 |
| FUEL FILTER | フューエルフィルタ | 26 |
| SEDIMENTER (A,B) | セジメンタ | 27 |
| NOZZLE & NOZZLE HOLDER | ノズル＆ノズルホルダ | 28 |
| INJECTION PUMP MOUNT (A,B,C,D,J) | インジェクションポンプマウント | 29 |
| INJECTION PUMP MOUNT (E,F,G,H,K) | インジェクションポンプマウント | 30 |
| INJECTION PUMP (INNER PARTS) | インジェクションポンプ（インナパーツ） | 31 |
| GOVERNOR | ガバナ | 32 |
| FEED PUMP | フィードポンプ | 33 |
| COUPLING | カップリング | 34 |
| ELECTRICAL | エレクトリカル | |
| STARTER & GENERATOR MOUNT | スタータ＆ジェネレータマウント | 35 |
| STARTER (INNER PARTS) (NIKKO MAKE) (A,B) | スタータ（インナパーツ） | 36 |
| STARTER (INNER PARTS) (HITACHI MAKE) (A,B) | スタータ（インナパーツ） | 37 |

# CONTENTS (2/2)
# 目　　次

A: A-6BG1QC
B: A-6BG1TQC
C: A-6BG1QC02
D: A-6BG1QC03
E: A-6BG1QC05
F: A-6BG1QC06
G: A-6BG1QC07
H: A-6BG1QC08
J: A-6BG1QC09
K: A-6BG1QC05S


| SECTION | 部　門 | FIG.No. 図番号 |
|---|---|---|
| STARTER (INNER PARTS) (C,D,E,F,H,J,K) | スタータ（インナパーツ） | 38 |
| STARTER (INNER PARTS) (G) (E/G NO.-108900) | スタータ（インナパーツ） | 39 |
| STARTER (INNER PARTS) (G) (E/G NO.108901-) | スタータ（インナパーツ） | 39A |
| GENERATOR (INNER PARTS) (NIKKO MAKE) (A,B,D,H) | ジェネレータ（インナパーツ） | 40 |
| GENERATOR (INNER PARTS) (NIKKO MAKE) (C,E,F,G,J,K) | ジェネレータ（インナパーツ） | 41 |
| GENERATOR (INNER PARTS) (HITACHI MAKE) (C,E,F,G,J,K) | ジェネレータ（インナパーツ） | 42 |
| ELECTRICAL PARTS,FOOT & HANGER | エレクトリカルパーツ，フット＆ハンガー | 43 |
| PARTS NUMBER INDEX | 部品番号順索引表 | 1 ～ 8 |

## FIG. 1 CYLINDER BLOCK
シリンダブロック

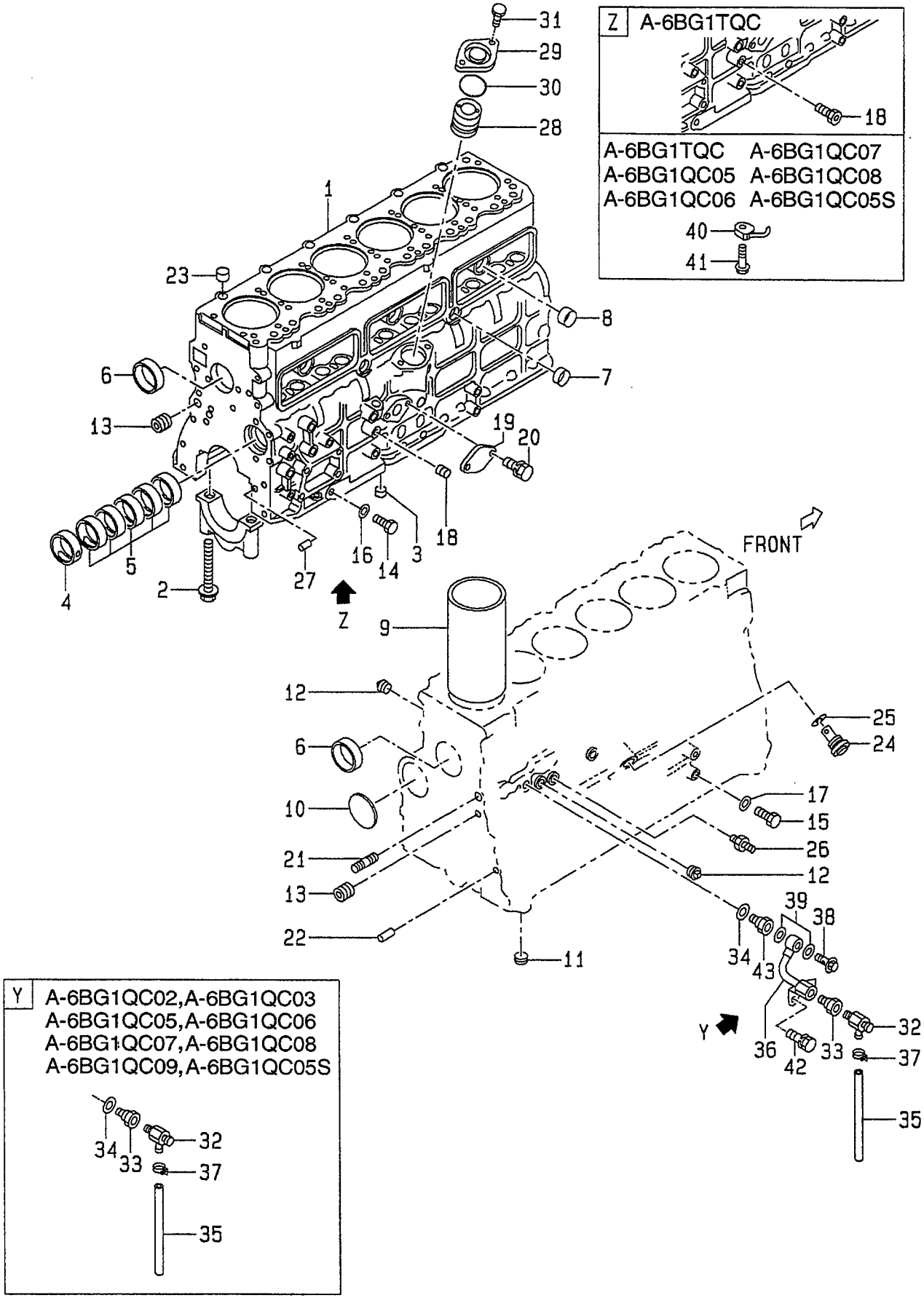

A: A-6BG1QC
B: A-6BG1TQC
C: A-6BG1QC02
D: A-6BG1QC03
E: A-6BG1QC05
F: A-6BG1QC06
G: A-6BG1QC07
H: A-6BG1QC08
J: A-6BG1QC09
K: A-6BG1QC05S

**FIG. 1**

| Item No. 見出番号 | Part No. 部品番号 | Mark 記号 | Description 部品名称 | | Req'd 個数 | Remarks : serial No. 備考：実施号車 |
|---|---|---|---|---|---|---|
| K1 | Z-1-87811-031-5 | | ENGINE OVERHAUL REPAIR KIT | ｴﾝｼﾞﾝｵｰﾊﾞﾎｰﾙ ﾘﾍﾟｱｰｷｯﾄ | 1 | A INC.16,17,25,30,34 & etc. |
| K2 | Z-1-87811-223-3 | | ENGINE OVERHAUL REPAIR KIT | ｴﾝｼﾞﾝｵｰﾊﾞﾎｰﾙ ﾘﾍﾟｱｰｷｯﾄ | 1 | B INC.16,17,25,30,34 & etc. |
| K3 | Z-1-87811-628-3 | | ENGINE OVERHAUL REPAIR KIT | ｴﾝｼﾞﾝｵｰﾊﾞﾎｰﾙ ﾘﾍﾟｱｰｷｯﾄ | 1 | C,D,E,F,H,J,K INC.16,17,25,30,34 & etc. |
| K4 | Z-1-87811-887-1 | | ENGINE OVERHAUL REPAIR KIT | ｴﾝｼﾞﾝｵｰﾊﾞﾎｰﾙ ﾘﾍﾟｱｰｷｯﾄ | 1 | G INC.16,17,25,30,34 & etc. |
| S1 | Z-1-87811-690-1 | | LINER SET | ﾗｲﾅｾｯﾄ | 6 | A & C & D & J -1998.12 INC.9 & etc. GRD=1 |
| - | Z-1-87811-942-0 | | LINER SET | ﾗｲﾅｾｯﾄ | 6 | A & C & D & J 1999.1- INC.9 & etc. GRD=1 |
| S2 | Z-1-87811-573-0 | | LINER SET | ﾗｲﾅｾｯﾄ | 6 | B -1996.8 INC.9 & etc. GRD=1 |
| - | Z-1-87811-795-0 | | LINER SET | ﾗｲﾅｾｯﾄ | 6 | B 1996.9-1998.1 INC.9 & etc. GRD=1 |
| - | Z-1-87811-903-0 | | LINER SET | ﾗｲﾅｾｯﾄ | 6 | B 1998.2-1998.12 INC.9 & etc. GRD=1 |
| - | Z-1-87811-962-0 | | LINER SET | ﾗｲﾅｾｯﾄ | 6 | B 1999.1- INC.9 & etc. GRD=1 |
| S3 | Z-1-87811-888-0 | | LINER SET | ﾗｲﾅｾｯﾄ | 6 | E & F & G & H & K -1998.12 INC.9 & etc. GRD=1 |
| - | Z-1-87811-954-0 | | LINER SET | ﾗｲﾅｾｯﾄ | 6 | E & F & G & H & K 1999.1- INC.9 & etc. GRD=1 |
| S4 | Z-1-87811-691-0 | | LINER SET | ﾗｲﾅｾｯﾄ | 6 | A & C & D & J -1998.12 INC.9 & etc. GRD=2 |
| - | Z-1-87811-943-0 | | LINER SET | ﾗｲﾅｾｯﾄ | 6 | A & C & D & J 1999.1- INC.9 & etc. GRD=2 |

## FIG. 1 CYLINDER BLOCK
シリンダブロック

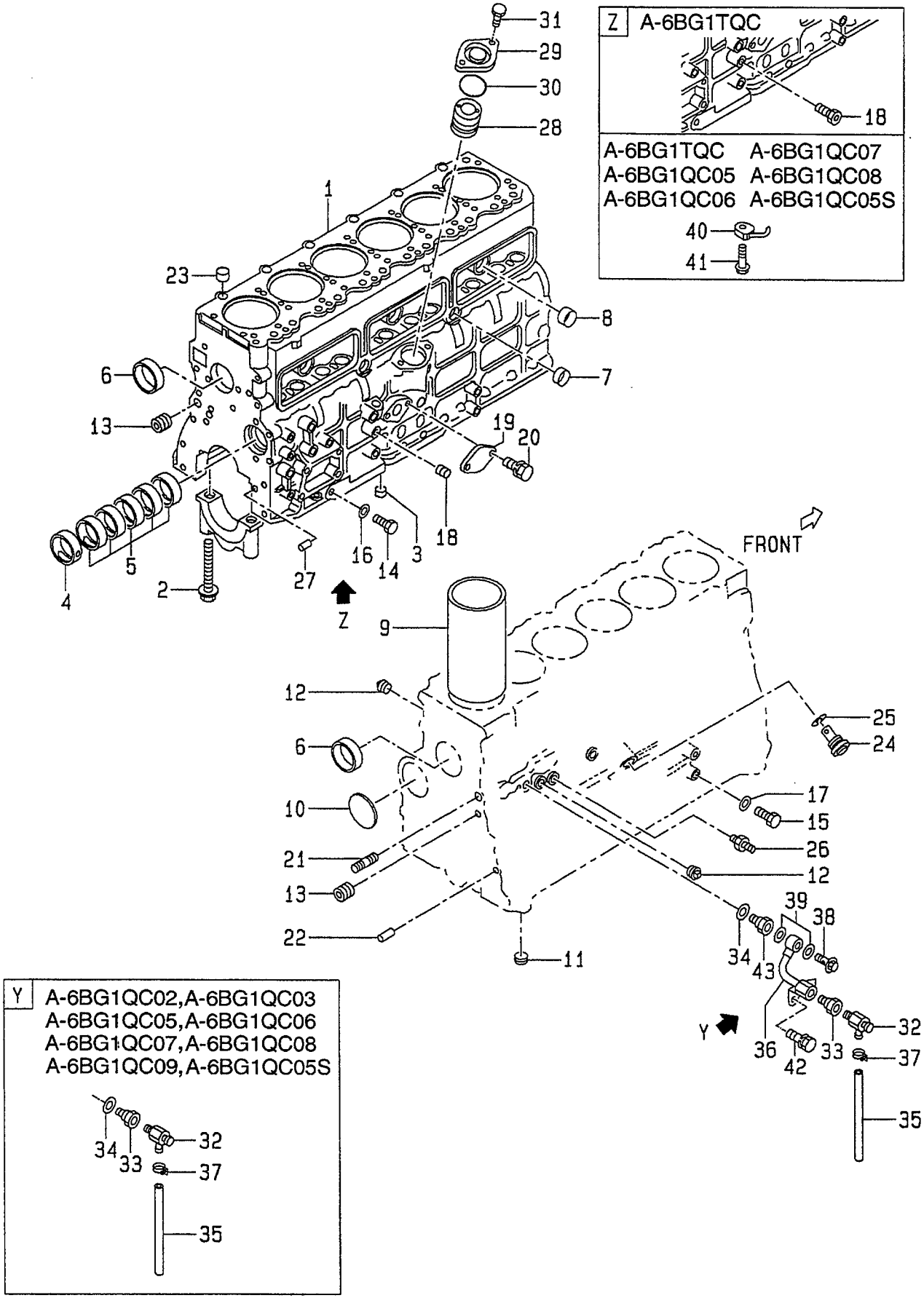

A: A-6BG1QC
B: A-6BG1TQC
C: A-6BG1QC02
D: A-6BG1QC03
E: A-6BG1QC05
F: A-6BG1QC06
G: A-6BG1QC07
H: A-6BG1QC08
J: A-6BG1QC09
K: A-6BG1QC05S

**FIG. 1**

| Item No. 見出番号 | Part No. 部品番号 | Mark 記号 | Description 部品名称 | Req'd 個数 | Remarks : serial No. 備考：実施号車 |
|---|---|---|---|---|---|
| S5 | Z-1-87811-574-0 | | LINER SET ﾗｲﾅｾｯﾄ | 6 | B<br>-1996.8<br>INC.9 & etc.<br>GRD=2 |
| - | Z-1-87811-796-0 | | LINER SET ﾗｲﾅｾｯﾄ | 6 | B<br>1996.9-1998.1<br>INC.9 & etc.<br>GRD=2 |
| - | Z-1-87811-904-0 | | LINER SET ﾗｲﾅｾｯﾄ | 6 | B<br>1998.2-1998.12<br>INC.9 & etc.<br>GRD=2 |
| - | Z-1-87811-963-0 | | LINER SET ﾗｲﾅｾｯﾄ | 6 | B<br>1999.1-<br>INC.9 & etc.<br>GRD=2 |
| S6 | Z-1-87811-889-0 | | LINER SET ﾗｲﾅｾｯﾄ | 6 | E & F & G & H & K<br>-1998.12<br>INC.9 & etc.<br>GRD=2 |
| - | Z-1-87811-955-0 | | LINER SET ﾗｲﾅｾｯﾄ | 6 | E & F & G & H & K<br>1999.1-<br>INC.9 & etc.<br>GRD=2 |
| S7 | Z-1-87811-692-0 | | LINER SET ﾗｲﾅｾｯﾄ | 6 | A & C & D & J<br>-1998.12<br>INC.9 & etc.<br>GRD=3 |
| - | Z-1-87811-944-0 | | LINER SET ﾗｲﾅｾｯﾄ | 6 | A & C & D & J<br>1999.1-<br>INC.9 & etc.<br>GRD=3 |
| S8 | Z-1-87811-575-0 | | LINER SET ﾗｲﾅｾｯﾄ | 6 | B<br>-1996.8<br>INC.9 & etc.<br>GRD=3 |
| - | Z-1-87811-797-0 | | LINER SET ﾗｲﾅｾｯﾄ | 6 | B<br>1996.9-1998.1<br>INC.9 & etc.<br>GRD=3 |
| - | Z-1-87811-905-0 | | LINER SET ﾗｲﾅｾｯﾄ | 6 | B<br>1998.2-1998.12<br>INC.9 & etc.<br>GRD=3 |
| - | Z-1-87811-964-0 | | LINER SET ﾗｲﾅｾｯﾄ | 6 | B<br>1999.1-<br>INC.9 & etc.<br>GRD=3 |

## FIG. 1 CYLINDER BLOCK
シリンダブロック

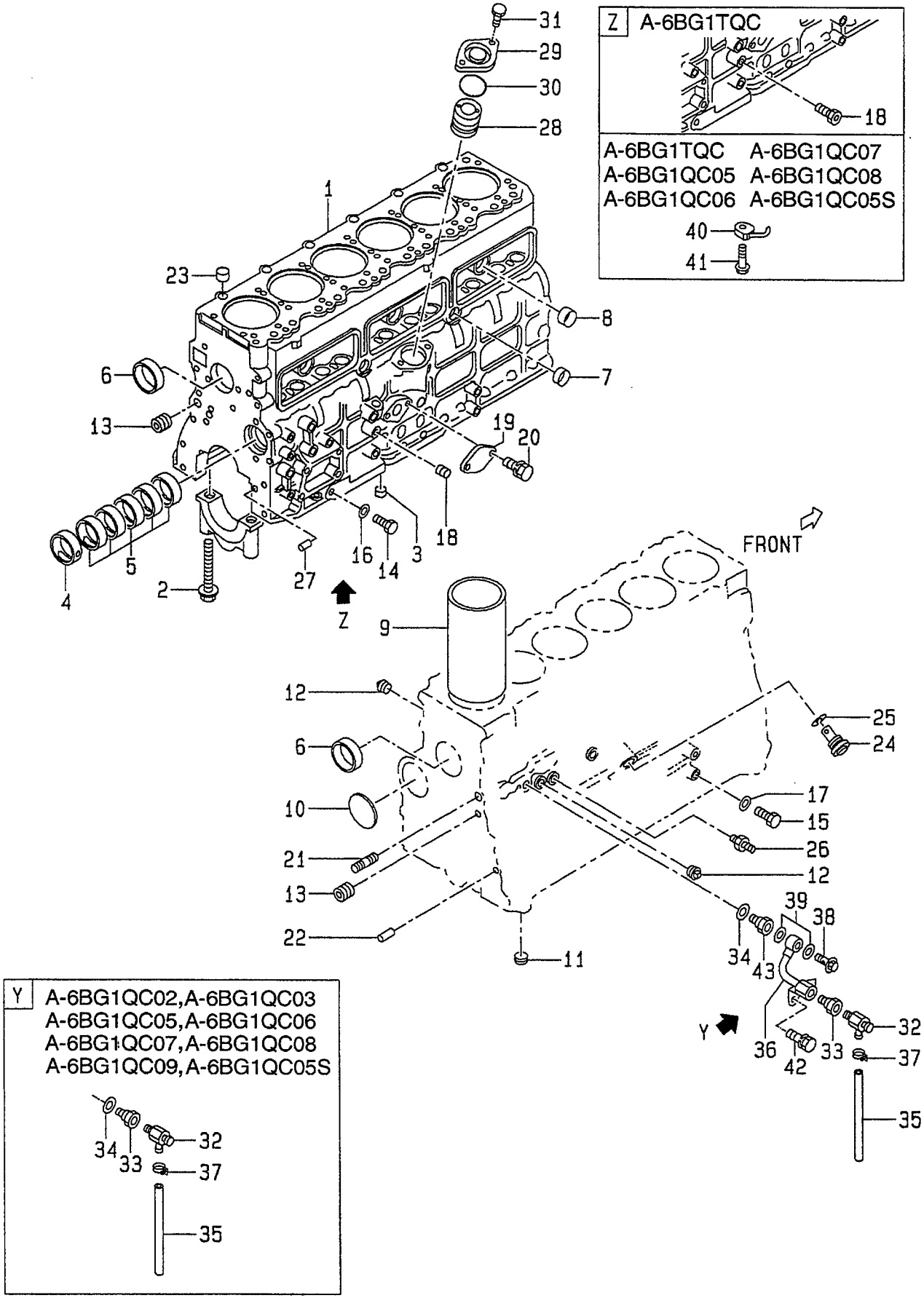

A: A-6BG1QC
B: A-6BG1TQC
C: A-6BG1QC02
D: A-6BG1QC03
E: A-6BG1QC05
F: A-6BG1QC06
G: A-6BG1QC07
H: A-6BG1QC08
J: A-6BG1QC09
K: A-6BG1QC05S

**FIG. 1**

| Item No. 見出番号 | Part No. 部品番号 | Mark 記号 | Description 部品名称 | | Req'd 個数 | Remarks : serial No. 備考：実施号車 |
|---|---|---|---|---|---|---|
| S9 | Z-1-87811-890-0 | | LINER SET | ﾗｲﾅｾｯﾄ | 6 | E & F & G & H & K<br>-1998.12<br>INC.9 & etc.<br>GRD=3 |
| - | Z-1-87811-956-0 | | LINER SET | ﾗｲﾅｾｯﾄ | 6 | E & F & G & H & K<br>1999.1-<br>INC.9 & etc.<br>GRD=3 |
| S10 | Z-1-87811-693-0 | | LINER SET | ﾗｲﾅｾｯﾄ | 6 | A & C & D & J<br>-1998.12<br>INC.9 & etc.<br>GRD=4 |
| - | Z-1-87811-945-0 | | LINER SET | ﾗｲﾅｾｯﾄ | 6 | A & C & D & J<br>1999.1-<br>INC.9 & etc.<br>GRD=4 |
| S11 | Z-1-87811-576-0 | | LINER SET | ﾗｲﾅｾｯﾄ | 6 | B<br>-1996.8<br>INC.9 & etc.<br>GRD=4 |
| - | Z-1-87811-798-0 | | LINER SET | ﾗｲﾅｾｯﾄ | 6 | B<br>1996.9-1998.1<br>INC.9 & etc.<br>GRD=4 |
| - | Z-1-87811-906-0 | | LINER SET | ﾗｲﾅｾｯﾄ | 6 | B<br>1998.2-1998.12<br>INC.9 & etc.<br>GRD=4 |
| - | Z-1-87811-965-0 | | LINER SET | ﾗｲﾅｾｯﾄ | 6 | B<br>1999.1-<br>INC.9 & etc.<br>GRD=4 |
| S12 | Z-1-87811-891-0 | | LINER SET | ﾗｲﾅｾｯﾄ | 6 | E & F & G & H & K<br>-1998.12<br>INC.9 & etc.<br>GRD=4 |
| - | Z-1-87811-957-0 | | LINER SET | ﾗｲﾅｾｯﾄ | 6 | E & F & G & H & K<br>1999.1-<br>INC.9 & etc.<br>GRD=4 |
| 1 | Z-1-11210-340-8 | | BLOCK,CYLINDER | ﾌﾞﾛｯｸ | 1 | A,C,D,J<br>INC.2-9 |
| - | Z-1-11210-443-7 | | BLOCK,CYLINDER | ﾌﾞﾛｯｸ | 1 | B,E,F,G,H,K<br>INC.2-9 |
| 2 | Z-1-09000-469-2 | | BOLT | ﾎﾞﾙﾄ | 14 | |
| 3 | Z-5-11257-001-1 | | DOWEL | ﾀﾞｳｴﾙ | 1 | |
| 4 | Z-9-11611-048-0 | | METAL,CAM | ﾒﾀﾙ | 1 | |
| 5 | Z-9-11613-035-0 | | METAL,CAM | ﾒﾀﾙ | 5 | |
| 6 | Z-1-09600-052-0 | | CUP | ｶｯﾌﾟ | 2 | |
| 7 | Z-5-11219-014-0 | | CUP | ｶｯﾌﾟ | 2 | |

## FIG. 1 CYLINDER BLOCK
シリンダブロック

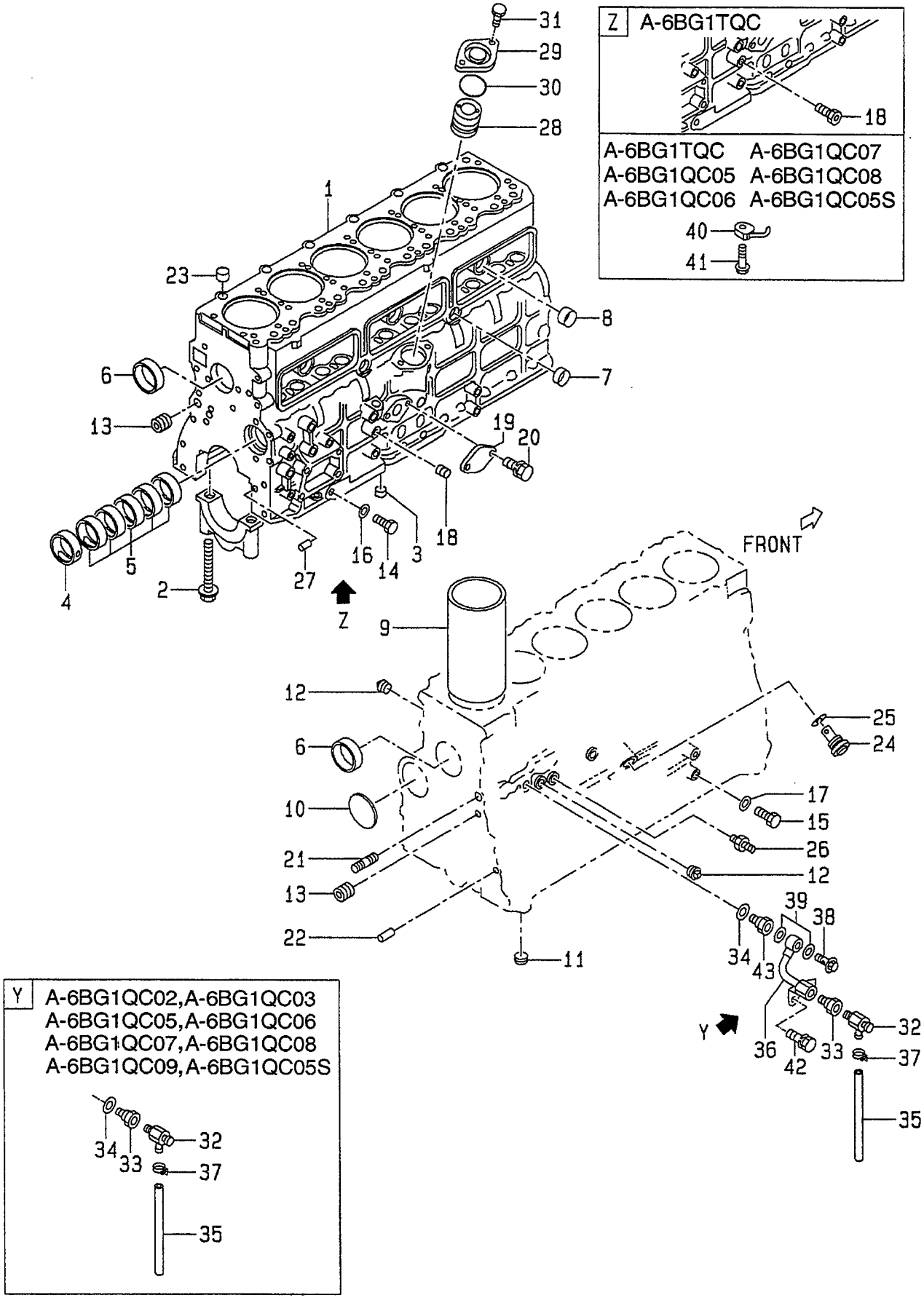

A: A-6BG1QC
B: A-6BG1TQC
C: A-6BG1QC02
D: A-6BG1QC03
E: A-6BG1QC05
F: A-6BG1QC06
G: A-6BG1QC07
H: A-6BG1QC08
J: A-6BG1QC09
K: A-6BG1QC05S

**FIG. 1**

| Item No. 見出番号 | Part No. 部品番号 | Mark 記号 | Description 部品名称 | | Req'd 個数 | Remarks : serial No. 備考：実施号車 |
|---|---|---|---|---|---|---|
| 8 | Z-1-09600-012-1 | | CUP | ｶｯﾌﾟ | 3 | |
| 9 | Z-1-11261-248-0 | * | LINER,CYLINDER | ﾗｲﾅ | 6 | -1998.12<br>GRD=1<br>PISTON GRADE=AX |
| - | Z-1-11261-382-0 | * | LINER,CYLINDER | ﾗｲﾅ | 6 | 1999.1-<br>GRD=1<br>PISTON GRADE=AX |
| - | Z-1-11261-249-0 | * | LINER,CYLINDER | ﾗｲﾅ | 6 | -1998.12<br>GRD=1<br>PISTON GRADE=CX |
| - | Z-1-11261-383-0 | * | LINER,CYLINDER | ﾗｲﾅ | 6 | 1999.1-<br>GRD=1<br>PISTON GRADE=CX |
| - | Z-1-11261-250-0 | * | LINER,CYLINDER | ﾗｲﾅ | 6 | -1998.12<br>GRD=2<br>PISTON GRADE=AX |
| - | Z-1-11261-384-0 | * | LINER,CYLINDER | ﾗｲﾅ | 6 | 1999.1-<br>GRD=2<br>PISTON GRADE=AX |
| - | Z-1-11261-251-0 | * | LINER,CYLINDER | ﾗｲﾅ | 6 | -1998.12<br>GRD=2<br>PISTON GRADE=CX |
| - | Z-1-11261-385-0 | * | LINER,CYLINDER | ﾗｲﾅ | 6 | 1999.1-<br>GRD=2<br>PISTON GRADE=CX |
| - | Z-1-11261-252-0 | * | LINER,CYLINDER | ﾗｲﾅ | 6 | -1998.12<br>GRD=3<br>PISTON GRADE=AX |
| - | Z-1-11261-386-0 | * | LINER,CYLINDER | ﾗｲﾅ | 6 | 1999.1-<br>GRD=3<br>PISTON GRADE=AX |
| - | Z-1-11261-253-0 | * | LINER,CYLINDER | ﾗｲﾅ | 6 | -1998.12<br>GRD=3<br>PISTON GRADE=CX |
| - | Z-1-11261-387-0 | * | LINER,CYLINDER | ﾗｲﾅ | 6 | 1999.1-<br>GRD=3<br>PISTON GRADE=CX |
| - | Z-1-11261-254-0 | * | LINER,CYLINDER | ﾗｲﾅ | 6 | -1998.12<br>GRD=4<br>PISTON GRADE=AX |
| - | Z-1-11261-388-0 | * | LINER,CYLINDER | ﾗｲﾅ | 6 | 1999.1-<br>GRD=4<br>PISTON GRADE=AX |
| - | Z-1-11261-255-0 | * | LINER,CYLINDER | ﾗｲﾅ | 6 | -1998.12<br>GRD=4<br>PISTON GRADE=CX |
| - | Z-1-11261-389-0 | * | LINER,CYLINDER | ﾗｲﾅ | 6 | 1999.1-<br>GRD=4<br>PISTON GRADE=CX |
| 10 | Z-9-09860-019-0 | | PLUG,PLATE | ﾌﾟﾗｸﾞ | 1 | |

## FIG. 1 CYLINDER BLOCK
シリンダブロック

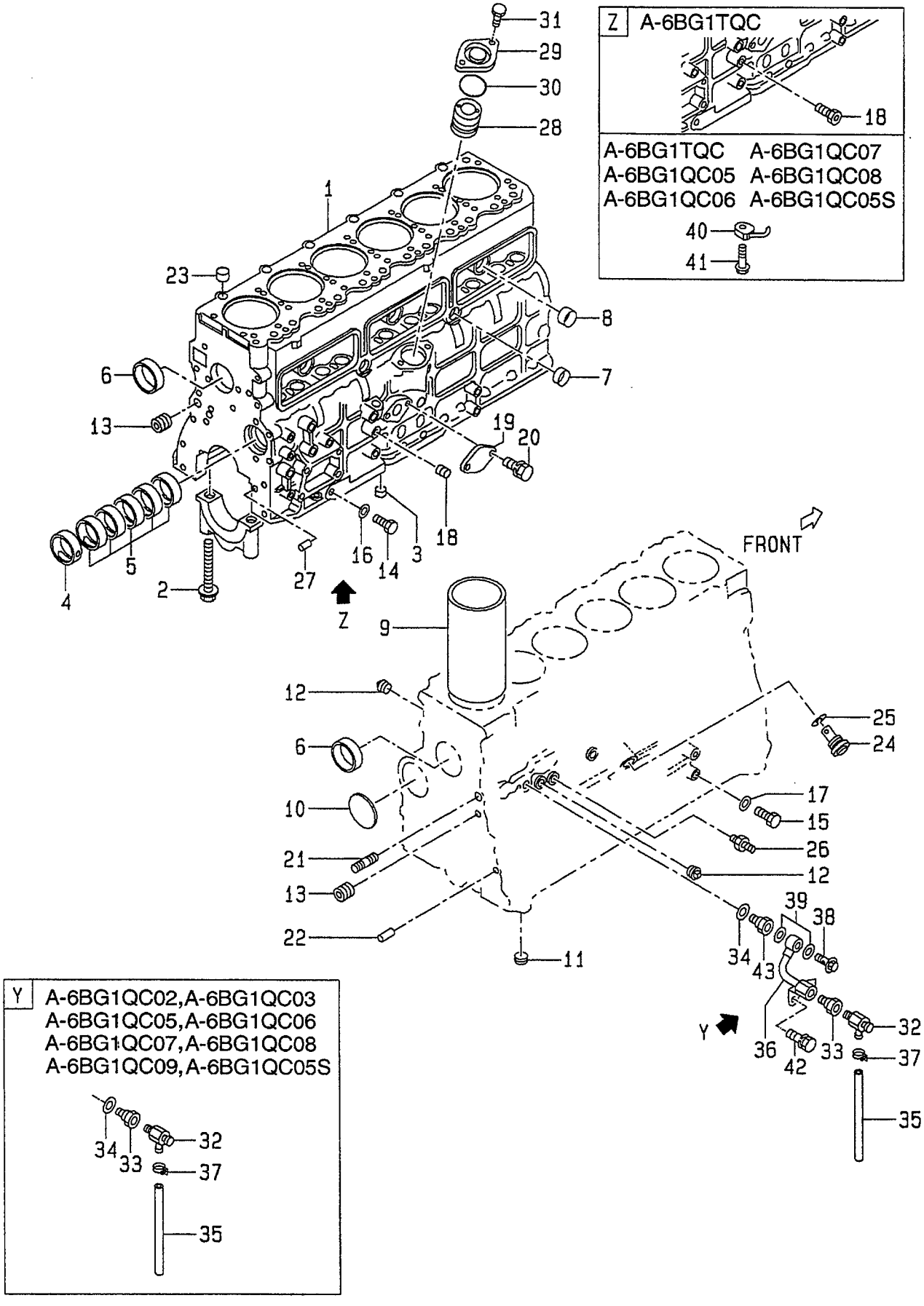

A: A-6BG1QC
B: A-6BG1TQC
C: A-6BG1QC02
D: A-6BG1QC03
E: A-6BG1QC05
F: A-6BG1QC06
G: A-6BG1QC07
H: A-6BG1QC08
J: A-6BG1QC09
K: A-6BG1QC05S

**FIG. 1**

| Item No. 見出番号 | Part No. 部品番号 | Mark 記号 | Description 部品名称 | | Req'd 個数 | Remarks : serial No. 備考：実施号車 |
|---|---|---|---|---|---|---|
| 11 | Z-1-09605-066-0 | | PLUG | ﾌﾟﾗｸﾞ | 1 | |
| 12 | Z-5-09605-018-0 | | PLUG | ﾌﾟﾗｸﾞ | 8 | A,C,D,E,F,G,H,J,K |
| 13 | Z-1-09605-068-1 | | PLUG | ﾌﾟﾗｸﾞ | 2 | |
| 14 | Z-9-9920-2314-0 | | PLUG | ﾌﾟﾗｸﾞ | 1 | |
| 15 | Z-9-9920-2312-0 | | PLUG | ﾌﾟﾗｸﾞ | 1 | |
| 16 | Z-9-0957-1414-0 | * | PACKING | ﾊﾟｯｷﾝｸﾞ | 1 | A & B |
| | | | | | | -1998.3 |
| - | Z-9-0957-2014-0 | * | PACKING | ﾊﾟｯｷﾝｸﾞ | 1 | A & B |
| | | | | | | 1998.4- |
| - | Z-9-0957-2014-0 | * | PACKING | ﾊﾟｯｷﾝｸﾞ | 1 | C,D,E,F,G,H,J,K |
| 17 | Z-9-0957-1412-0 | * | PACKING | ﾊﾟｯｷﾝｸﾞ | 1 | |
| 18 | Z-1-09605-079-1 | | PLUG | ﾌﾟﾗｸﾞ | 1 | A,C,D,E,F,G,H,J,K |
| - | Z-1-09660-101-0 | | CONNECTOR | ｺﾈｸﾀ | 1 | B |
| 19 | Z-1-11219-163-0 | | COVER | ｶﾊﾞｰ | 1 | A,C,D,E,F,G,H,J,K |
| 20 | Z-0-5014-0820-0 | | BOLT | ﾎﾞﾙﾄ | 2 | A |
| | | | | | | -1997.1 |
| - | Z-0-2868-0820-0 | | BOLT | ﾎﾞﾙﾄ | 2 | A |
| | | | | | | 1997.2- |
| - | Z-0-2868-0820-0 | | BOLT | ﾎﾞﾙﾄ | 2 | C,D,E,F,G,H,J,K |
| 21 | Z-5-09300-023-1 | | STUD | ｽﾀｯﾄﾞ | 1 | |
| 22 | Z-9-0815-1018-0 | | PIN,STRAIGHT | ﾋﾟﾝ | 2 | |
| 23 | Z-8-94148-079-0 | | DOWEL | ﾀﾞｳｴﾙ | 2 | |
| 24 | Z-8-97023-339-0 | | VALVE,RELIEF | ﾊﾞﾙﾌﾞ | 1 | INC.25 |
| 25 | Z-5-09623-035-0 | * | PACKING | ﾊﾟｯｷﾝｸﾞ | 1 | |
| 26 | Z-5-09654-013-0 | | NIPPLE | ﾆｯﾌﾟﾙ | 1 | |
| 27 | Z-1-09740-078-0 | | PIN,TIMING GEAR CASE | ﾋﾟﾝ | 1 | |
| 28 | Z-9-11224-602-1 | | BUSHING | ﾌﾞｯｼﾝｸﾞ | 1 | |
| 29 | Z-1-11219-129-1 | | COVER | ｶﾊﾞｰ | 1 | |
| 30 | Z-1-09623-465-0 | * | O RING | Oﾘﾝｸﾞ | 1 | |
| 31 | Z-0-5014-0822-0 | | BOLT | ﾎﾞﾙﾄ | 2 | |
| 32 | Z-1-09680-024-0 | | COCK,DRAIN | ｺｯｸ | 1 | |
| 33 | Z-1-09666-036-0 | | JOINT | ｼﾞｮｲﾝﾄ | 1 | |
| 34 | Z-1-09630-115-0 | * | PACKING | ﾊﾟｯｷﾝｸﾞ | 1 | |
| 35 | Z-9-09914-701-0 | | HOSE,VINYL | ﾎｰｽ | 1 | |
| 36 | Z-1-13721-341-2 | | PIPE | ﾊﾟｲﾌﾟ | 1 | A,B |
| 37 | Z-8-97015-754-1 | | CLIP | ｸﾘｯﾌﾟ | 1 | |
| 38 | Z-1-09675-086-0 | | BOLT,EYE | ﾎﾞﾙﾄ | 1 | A,B |
| 39 | Z-1-09630-085-0 | | PACKING | ﾊﾟｯｷﾝｸﾞ | 2 | A,B |
| 40 | Z-1-13342-132-0 | | JET,OIL | ｼﾞｪｯﾄ | 6 | B |
| - | Z-1-13342-110-0 | | JET,OIL | ｼﾞｪｯﾄ | 6 | E,F,G,H,K |
| 41 | Z-1-13161-012-0 | | VALVE,CHECK | ﾊﾞﾙﾌﾞ | 6 | B,E,F,G,H,K |
| 42 | Z-0-5004-1020-0 | | BOLT | ﾎﾞﾙﾄ | 2 | A & B |
| | | | | | | -1997.1 |
| - | Z-0-2868-1020-0 | | BOLT | ﾎﾞﾙﾄ | 2 | A & B |
| | | | | | | 1997.2- |
| 43 | Z-5-09666-002-1 | | NIPPLE | ﾆｯﾌﾟﾙ | 1 | A,B |

## FIG. 2 CHAMBER COVER & BREATHER
ﾁｬﾝﾊﾞｶﾊﾞｰ&ﾌﾞﾘｰｻﾞ

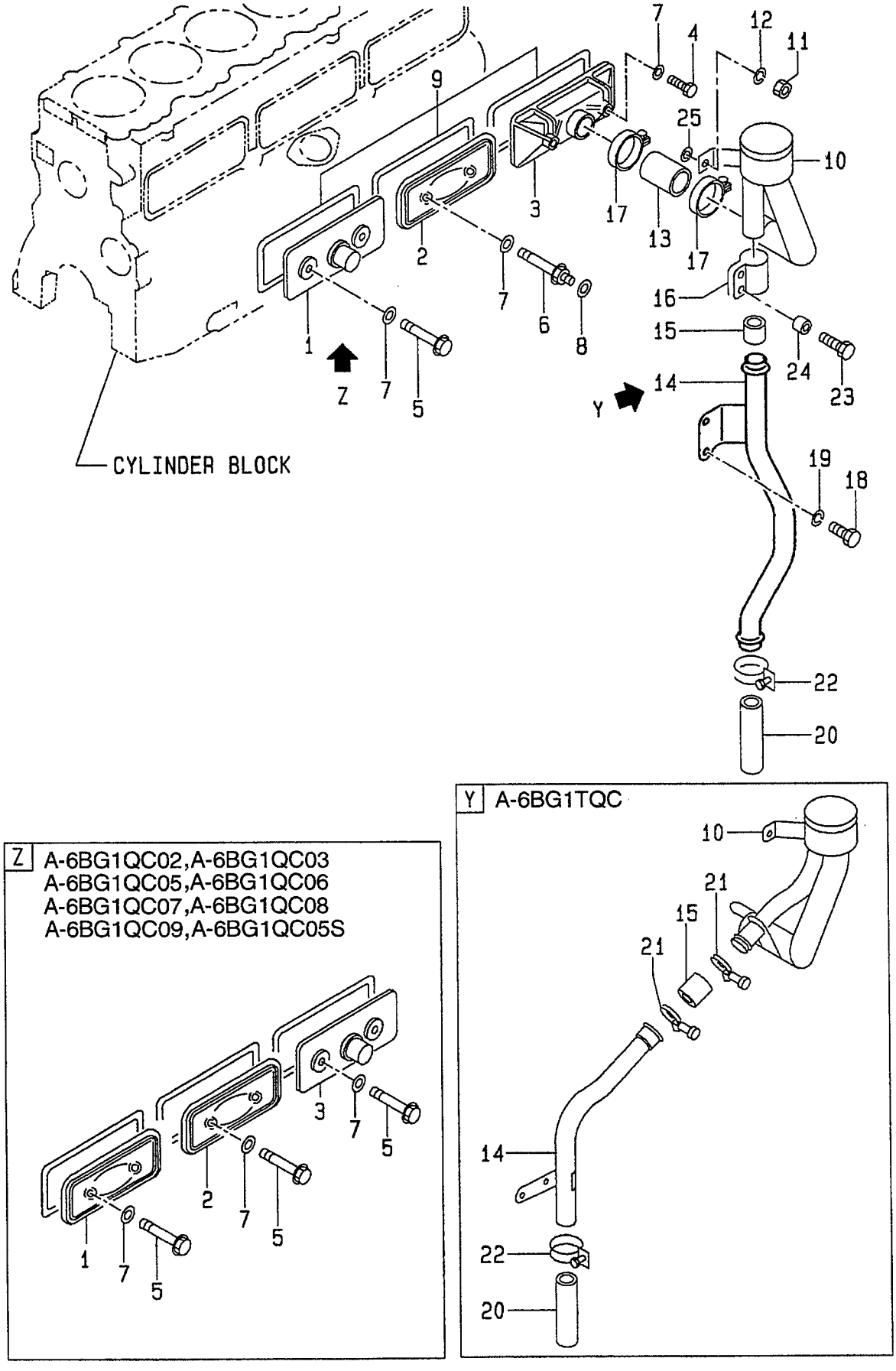

A: A-6BG1QC
B: A-6BG1TQC
C: A-6BG1QC02
D: A-6BG1QC03
E: A-6BG1QC05
F: A-6BG1QC06
G: A-6BG1QC07
H: A-6BG1QC08
J: A-6BG1QC09
K: A-6BG1QC05S

**FIG. 2**

| Item No. 見出番号 | Part No. 部品番号 | Mark 記号 | Description 部品名称 | | Req'd 個数 | Remarks : serial No. 備考：実施号車 |
|---|---|---|---|---|---|---|
| K1 | Z-1-87811-031-5 | | ENGINE OVERHAUL REPAIR KIT | ｴﾝｼﾞﾝｵｰﾊﾞﾎｰﾙ ﾘﾍﾟｱｰｷｯﾄ | 1 | A INC.7,9 & etc. |
| K2 | Z-1-87811-223-3 | | ENGINE OVERHAUL REPAIR KIT | ｴﾝｼﾞﾝｵｰﾊﾞﾎｰﾙ ﾘﾍﾟｱｰｷｯﾄ | 1 | B INC.7,9 & etc. |
| K3 | Z-1-87811-628-3 | | ENGINE OVERHAUL REPAIR KIT | ｴﾝｼﾞﾝｵｰﾊﾞﾎｰﾙ ﾘﾍﾟｱｰｷｯﾄ | 1 | C,D,E,F,H,J,K INC.7,9 & etc. |
| K4 | Z-1-87811-887-1 | | ENGINE OVERHAUL REPAIR KIT | ｴﾝｼﾞﾝｵｰﾊﾞﾎｰﾙ ﾘﾍﾟｱｰｷｯﾄ | 1 | G INC.7,9 & etc. |
| 1 | Z-1-11291-080-1 | | COVER | ｶﾊﾞｰ | 1 | A,B |
| - | Z-8-97028-525-0 | | COVER | ｶﾊﾞｰ | 1 | C,D,E,F,G,H,J,K |
| 2 | Z-8-97028-525-0 | | COVER | ｶﾊﾞｰ | 1 | |
| 3 | Z-5-11290-145-1 | | COVER | ｶﾊﾞｰ | 1 | A -2000.9 |
| - | Z-1-11290-245-1 | | COVER | ｶﾊﾞｰ | 1 | A 2000.10- |
| - | Z-5-11290-145-1 | | COVER | ｶﾊﾞｰ | 1 | B |
| - | Z-9-11291-605-1 | | COVER | ｶﾊﾞｰ | 1 | C,D,E,F,G,H,J,K |
| 4 | Z-1-09052-022-1 | | BOLT | ﾎﾞﾙﾄ | 2 | A,B |
| 5 | Z-8-94367-530-1 | | BOLT | ﾎﾞﾙﾄ | 3 | A,B |
| - | Z-8-94367-530-1 | | BOLT | ﾎﾞﾙﾄ | 6 | C,D,E,F,G |
| 6 | Z-1-09052-018-1 | | BOLT | ﾎﾞﾙﾄ | 1 | A,B |
| 7 | Z-9-0957-2008-0 | * | PACKING | ﾊﾟｯｷﾝｸﾞ | 6 | |
| 8 | Z-9-0916-0508-0 | | WASHER | ﾜｯｼｬ | 1 | A |
| 9 | Z-8-94367-368-1 | * | PACKING | ﾊﾟｯｷﾝｸﾞ | 3 | |
| 10 | Z-1-11740-171-0 | | BREATHER | ﾌﾞﾘｰｻﾞ | 1 | A -1997.12 |
| - | Z-1-11740-252-0 | | BREATHER | ﾌﾞﾘｰｻﾞ | 1 | A 1998.1-2000.9 |
| - | Z-1-11740-272-0 | | BREATHER | ﾌﾞﾘｰｻﾞ | 1 | A 2000.10- |
| - | Z-1-11740-226-1 | | BREATHER | ﾌﾞﾘｰｻﾞ | 1 | B -1997.12 |
| - | Z-1-11740-253-0 | | BREATHER | ﾌﾞﾘｰｻﾞ | 1 | B 1998.1- |
| 11 | Z-9-0911-0508-0 | | NUT | ﾅｯﾄ | 2 | A & B -1997.12 |
| - | Z-0-9115-0208-0 | | NUT | ﾅｯﾄ | 2 | A & B 1998.1- |
| 12 | Z-9-0915-0508-0 | | WASHER | ﾜｯｼｬ | 2 | A & B -1997.12 |
| 13 | Z-1-09360-439-1 | | HOSE | ﾎｰｽ | 1 | A -2000.9 |
| - | Z-8-97224-205-0 | | HOSE | ﾎｰｽ | 1 | A 2000.10- |
| - | Z-1-09360-439-1 | | HOSE | ﾎｰｽ | 1 | B |
| 14 | Z-1-11742-011-0 | | PIPE,DRAIN | ﾊﾟｲﾌﾟ | 1 | A |
| - | Z-1-11742-022-1 | | PIPE,DRAIN | ﾊﾟｲﾌﾟ | 1 | B |
| 15 | Z-5-09360-978-0 | | HOSE | ﾎｰｽ | 1 | A -2000.9 |

## FIG. 2 CHAMBER COVER & BREATHER
ﾁｬﾝﾊﾞｶﾊﾞｰ&ﾌﾞﾘｰｻﾞ

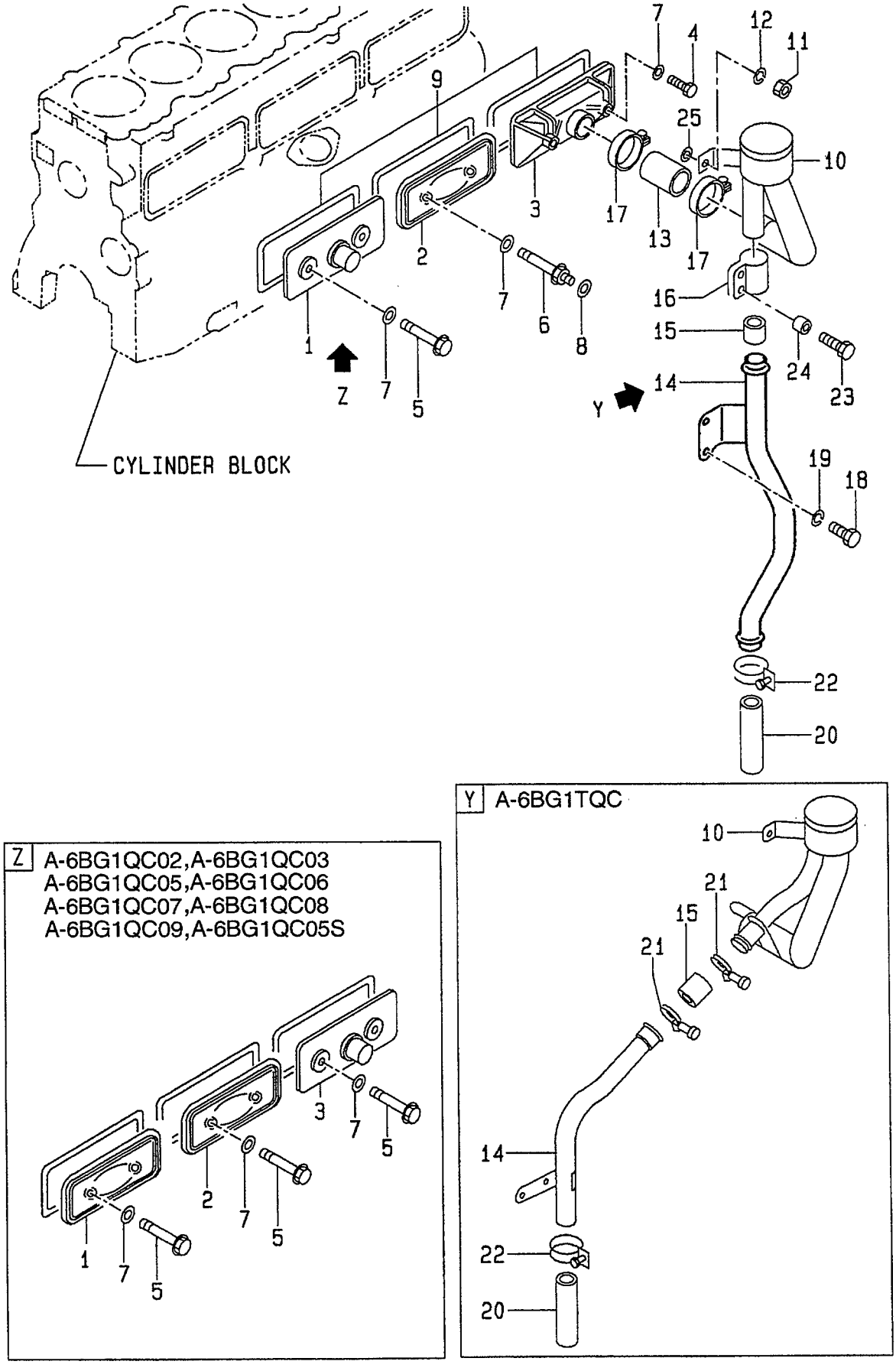

A: A-6BG1QC
B: A-6BG1TQC
C: A-6BG1QC02
D: A-6BG1QC03
E: A-6BG1QC05
F: A-6BG1QC06
G: A-6BG1QC07
H: A-6BG1QC08
J: A-6BG1QC09
K: A-6BG1QC05S

**FIG. 2**

| Item No. 見出番号 | Part No. 部品番号 | Mark 記号 | Description 部品名称 | | Req'd 個数 | Remarks : serial No. 備考：実施号車 |
|---|---|---|---|---|---|---|
| 15 | Z-5-11749-032-1 | | HOSE | ﾎｰｽ | 1 | A<br>2000.10- |
| - | Z-5-11749-032-1 | | HOSE | ﾎｰｽ | 1 | B |
| 16 | Z-9-09715-067-0 | | CLIP | ｸﾘｯﾌﾟ | 1 | A |
| 17 | Z-1-09704-057-0 | | CLIP | ｸﾘｯﾌﾟ | 2 | A<br>-1995.4 |
| - | Z-8-94162-568-0 | | CLIP | ｸﾘｯﾌﾟ | 2 | A<br>1995.5-2000.9 |
| - | Z-9-09915-281-1 | | CLIP | ｸﾘｯﾌﾟ | 2 | A<br>2000.10- |
| - | Z-8-94162-568-0 | | CLIP | ｸﾘｯﾌﾟ | 2 | B |
| 18 | Z-0-2080-1016-0 | | BOLT | ﾎﾞﾙﾄ | 2 | A<br>-1997.4 |
| - | Z-0-2808-1016-0 | | BOLT | ﾎﾞﾙﾄ | 2 | A<br>1997.5- |
| 19 | Z-9-0915-0510-0 | | WASHER | ﾜｯｼｬ | 2 | A<br>-1997.5 |
| 20 | Z-8-94137-682-0 | | PIPE,VINYL | ﾊﾟｲﾌﾟ | 1 | A,B |
| 21 | Z-5-09704-031-3 | | CLIP | ｸﾘｯﾌﾟ | 2 | B |
| 22 | Z-9-09915-666-1 | | CLIP | ｸﾘｯﾌﾟ | 1 | A,B |
| 23 | Z-0-2080-0625-0 | | BOLT | ﾎﾞﾙﾄ | 2 | A |
| 24 | Z-8-94235-157-0 | | PIECE,DISTANCE | ﾋﾟｰｽ | 2 | A |
| 25 | Z-9-0916-4608-0 | | WASHER | ﾜｯｼｬ | 2 | A & B<br>1998.1- |

## FIG. 3 CRANKSHAFT,PISTON & FLYWHEEL
クランクシャフト,ピストン&フライホイール

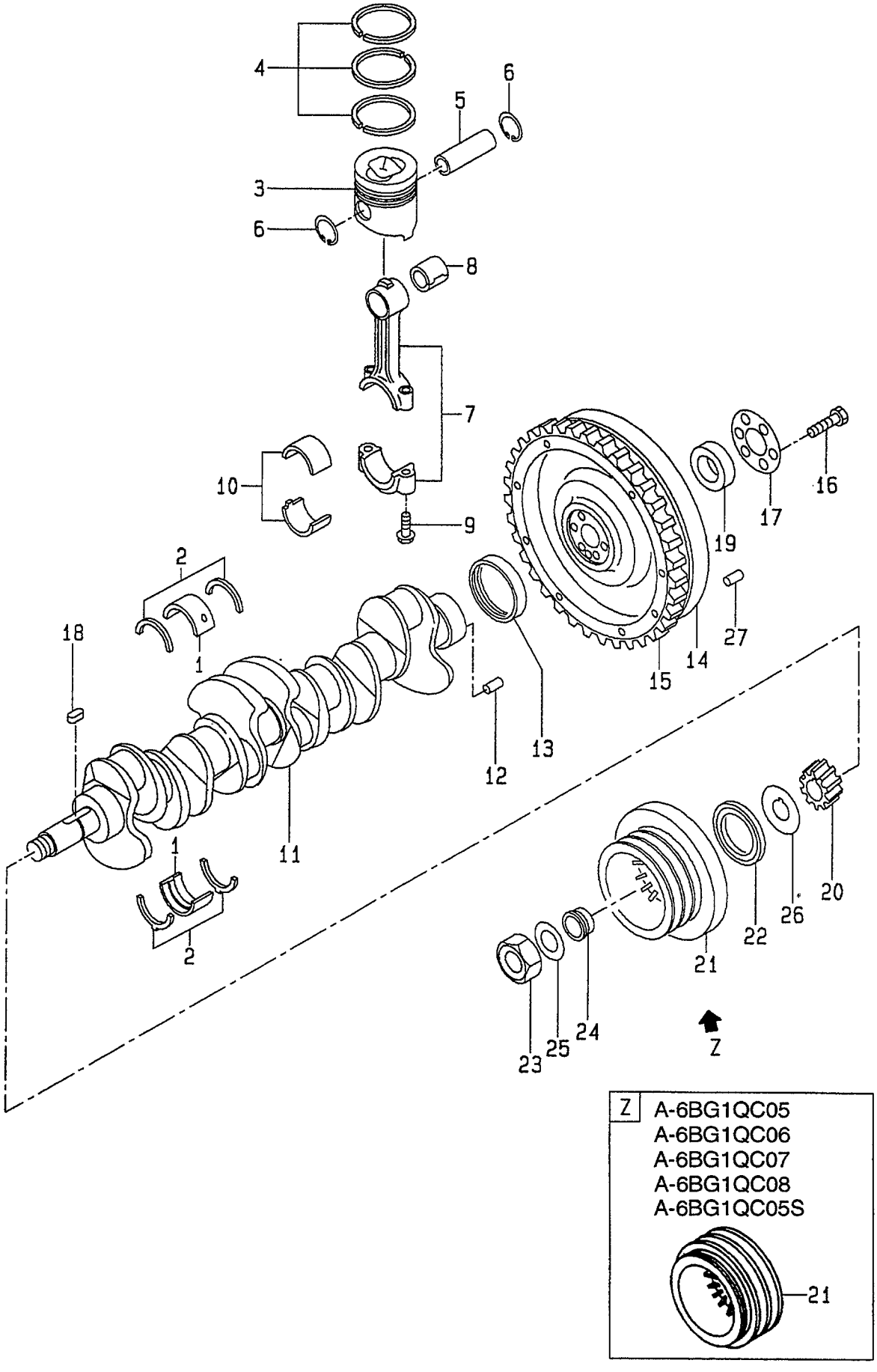

A: A-6BG1QC
B: A-6BG1TQC
C: A-6BG1QC02
D: A-6BG1QC03
E: A-6BG1QC05
F: A-6BG1QC06
G: A-6BG1QC07
H: A-6BG1QC08
J: A-6BG1QC09
K: A-6BG1QC05S

**FIG. 3**

| Item No. 見出番号 | Part No. 部品番号 | Mark 記号 | Description 部品名称 | Req'd 個数 | Remarks : serial No. 備考：実施号車 |
|---|---|---|---|---|---|
| S1 | Z-1-87811-690-0 | | LINER SET ﾗｲﾅｾｯﾄ | 6 | A & C & D & J<br>-1998.12<br>INC.3-6,8 & etc.<br>GRD=1 |
| - | Z-1-87811-942-0 | | LINER SET ﾗｲﾅｾｯﾄ | 6 | A & C & D & J<br>1999.1-<br>INC.3-6,8 & etc.<br>GRD=1 |
| S2 | Z-1-87811-573-0 | | LINER SET ﾗｲﾅｾｯﾄ | 6 | B<br>-1996.8<br>INC.3-6,8 & etc.<br>GRD=1 |
| - | Z-1-87811-795-0 | | LINER SET ﾗｲﾅｾｯﾄ | 6 | B<br>1996.9-1998.1<br>INC.3-6,8 & etc.<br>GRD=1 |
| - | Z-1-87811-903-0 | | LINER SET ﾗｲﾅｾｯﾄ | 6 | B<br>1998.2-1998.12<br>INC.3-6,8 & etc.<br>GRD=1 |
| - | Z-1-87811-962-0 | | LINER SET ﾗｲﾅｾｯﾄ | 6 | B<br>1999.1-<br>INC.3-6,8 & etc.<br>GRD=1 |
| S3 | Z-1-87811-888-0 | | LINER SET ﾗｲﾅｾｯﾄ | 6 | E & F & G & H & K<br>-1998.12<br>INC.3-6,8 & etc.<br>GRD=1 |
| - | Z-1-87811-954-0 | | LINER SET ﾗｲﾅｾｯﾄ | 6 | E & F & G & H & K<br>1999.1-<br>INC.3-6,8 & etc.<br>GRD=1 |
| S4 | Z-1-87811-691-0 | | LINER SET ﾗｲﾅｾｯﾄ | 6 | A & C & D & J<br>-1998.12<br>INC.3-6,8 & etc.<br>GRD=2 |
| - | Z-1-87811-943-0 | | LINER SET ﾗｲﾅｾｯﾄ | 6 | A & C & D & J<br>1999.1-<br>INC.3-6,8 & etc.<br>GRD=2 |
| S5 | Z-1-87811-574-0 | | LINER SET ﾗｲﾅｾｯﾄ | 6 | B<br>-1996.8<br>INC.3-6,8 & etc.<br>GRD=2 |
| - | Z-1-87811-796-0 | | LINER SET ﾗｲﾅｾｯﾄ | 6 | B<br>1996.9-1998.1<br>INC.3-6,8 & etc.<br>GRD=2 |

## FIG. 3 CRANKSHAFT,PISTON & FLYWHEEL
クランクシャフト,ピストン&フライホイール

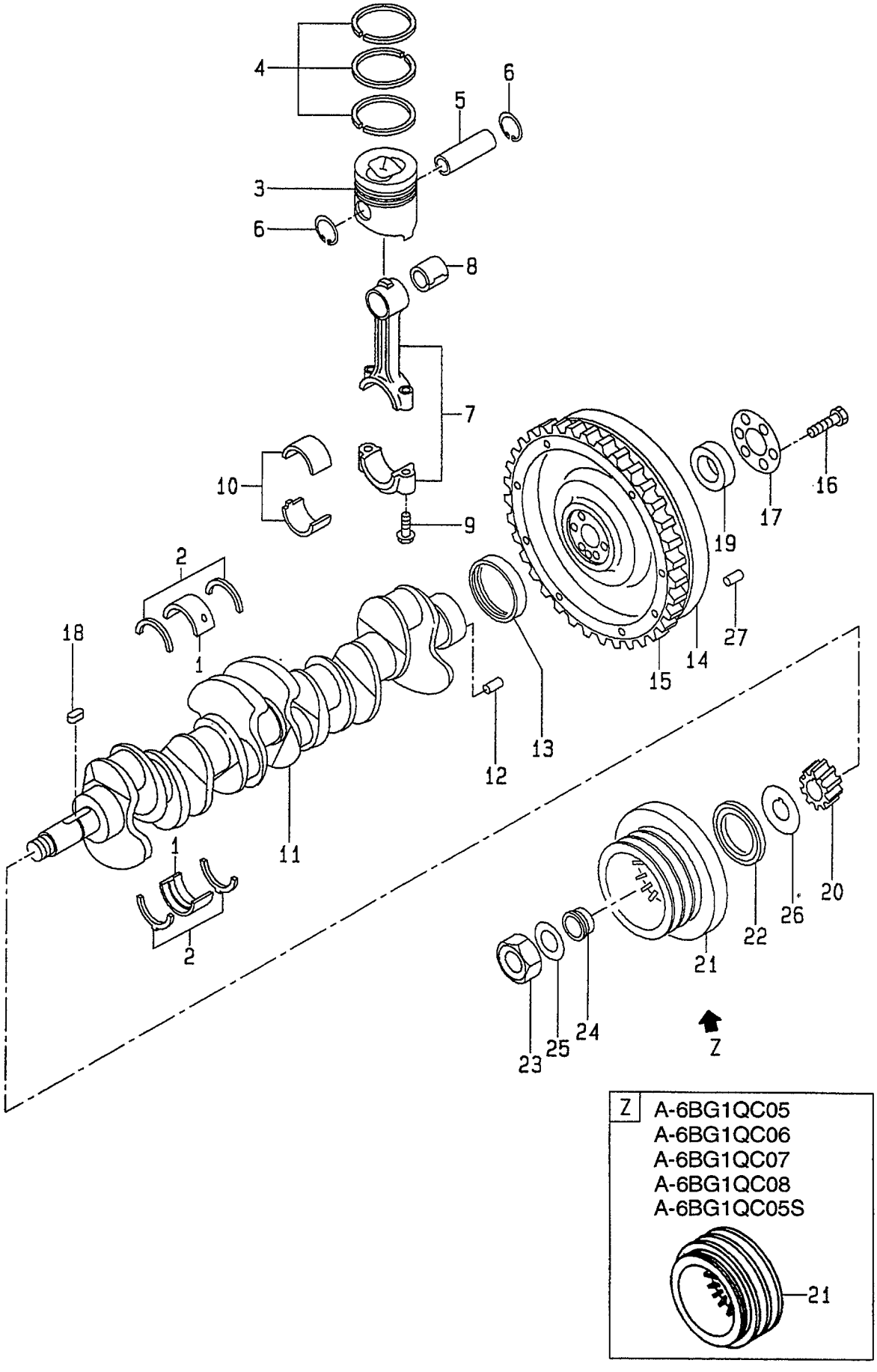

A: A-6BG1QC
B: A-6BG1TQC
C: A-6BG1QC02
D: A-6BG1QC03
E: A-6BG1QC05
F: A-6BG1QC06
G: A-6BG1QC07
H: A-6BG1QC08
J: A-6BG1QC09
K: A-6BG1QC05S

**FIG. 3**

| Item No. 見出番号 | Part No. 部品番号 | Mark 記号 | Description 部品名称 | Req'd 個数 | Remarks : serial No. 備考：実施号車 |
|---|---|---|---|---|---|
| S5 | Z-1-87811-904-0 | | LINER SET ﾗｲﾅｾｯﾄ | 6 | B<br>1998.2-1998.12<br>INC.3-6,8 & etc.<br>GRD=2 |
| - | Z-1-87811-963-0 | | LINER SET ﾗｲﾅｾｯﾄ | 6 | B<br>1999.1-<br>INC.3-6,8 & etc.<br>GRD=2 |
| S6 | Z-1-87811-889-0 | | LINER SET ﾗｲﾅｾｯﾄ | 6 | E & F & G & H & K<br>-1998.12<br>INC.3-6,8 & etc.<br>GRD=2 |
| - | Z-1-87811-955-0 | | LINER SET ﾗｲﾅｾｯﾄ | 6 | E & F & G & H & K<br>1999.1-<br>INC.3-6,8 & etc.<br>GRD=2 |
| S7 | Z-1-87811-692-0 | | LINER SET ﾗｲﾅｾｯﾄ | 6 | A & C & D & J<br>-1998.12<br>INC.3-6,8 & etc.<br>GRD=3 |
| - | Z-1-87811-944-0 | | LINER SET ﾗｲﾅｾｯﾄ | 6 | A & C & D & J<br>1999.1-<br>INC.3-6,8 & etc.<br>GRD=3 |
| S8 | Z-1-87811-575-0 | | LINER SET ﾗｲﾅｾｯﾄ | 6 | B<br>-1996.8<br>INC.3-6,8 & etc.<br>GRD=3 |
| - | Z-1-87811-797-0 | | LINER SET ﾗｲﾅｾｯﾄ | 6 | B<br>1996.9-1998.1<br>INC.3-6,8 & etc.<br>GRD=3 |
| - | Z-1-87811-905-0 | | LINER SET ﾗｲﾅｾｯﾄ | 6 | B<br>1998.2-1998.12<br>INC.3-6,8 & etc.<br>GRD=3 |
| - | Z-1-87811-964-0 | | LINER SET ﾗｲﾅｾｯﾄ | 6 | B<br>1999.1-<br>INC.3-6,8 & etc.<br>GRD=3 |
| S9 | Z-1-87811-890-0 | | LINER SET ﾗｲﾅｾｯﾄ | 6 | E & F & G & H & K<br>-1998.12<br>INC.3-6,8 & etc.<br>GRD=3 |
| - | Z-1-87811-956-0 | | LINER SET ﾗｲﾅｾｯﾄ | 6 | E & F & G & H & K<br>1999.1-<br>INC.3-6,8 & etc.<br>GRD=3 |

## FIG. 3 CRANKSHAFT,PISTON & FLYWHEEL
クランクシャフト,ピストン&フライホイール

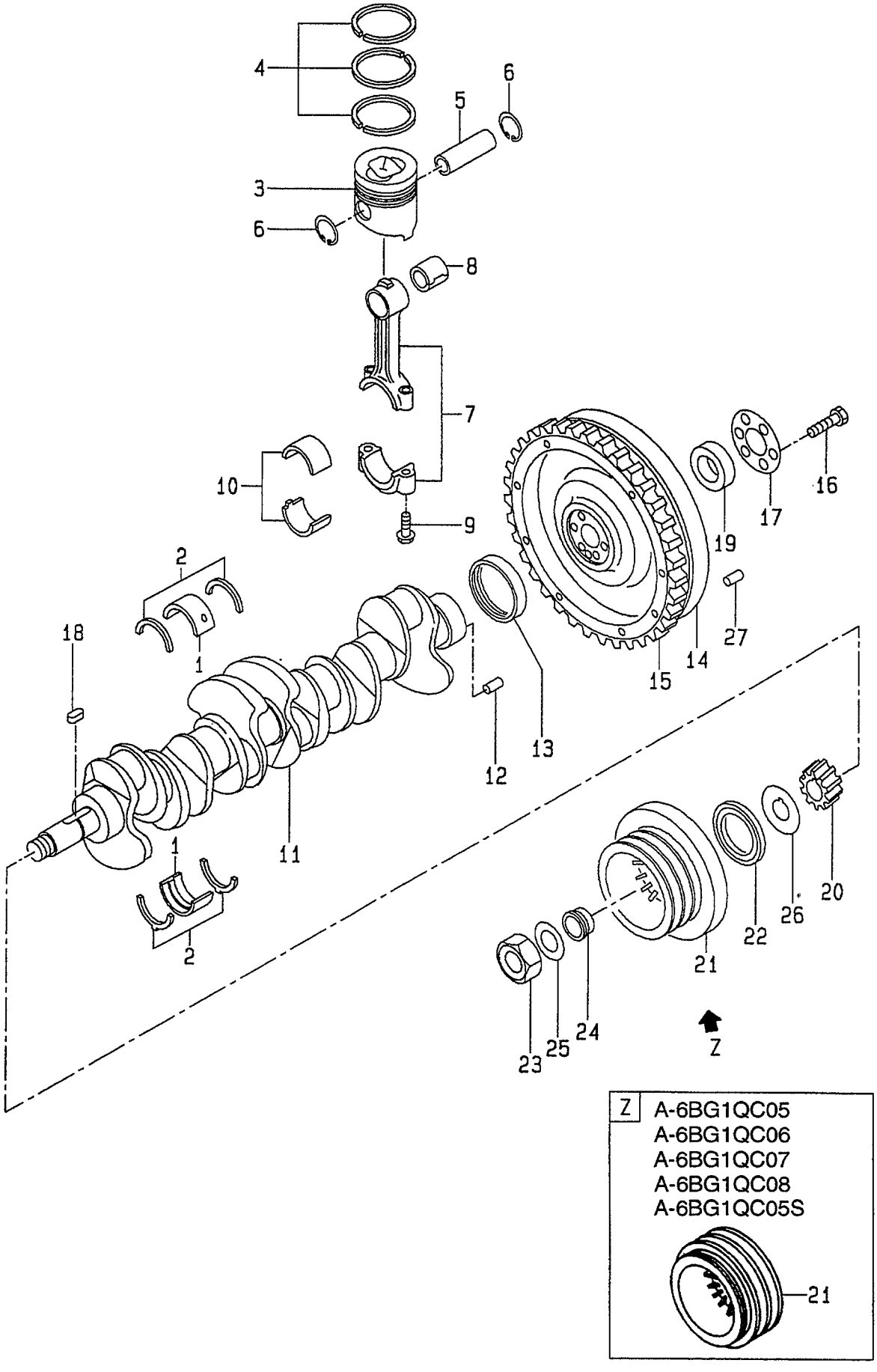

A: A-6BG1QC
B: A-6BG1TQC
C: A-6BG1QC02
D: A-6BG1QC03
E: A-6BG1QC05
F: A-6BG1QC06
G: A-6BG1QC07
H: A-6BG1QC08
J: A-6BG1QC09
K: A-6BG1QC05S

**FIG. 3**

| Item No. 見出番号 | Part No. 部品番号 | Mark 記号 | Description 部品名称 | | Req'd 個数 | Remarks : serial No. 備考：実施号車 |
|---|---|---|---|---|---|---|
| S10 | Z-1-87811-693-0 | | LINER SET | ﾗｲﾅｾｯﾄ | 6 | A & C & D & J<br>-1998.12<br>INC.3-6,8 & etc.<br>GRD=4 |
| - | Z-1-87811-945-0 | | LINER SET | ﾗｲﾅｾｯﾄ | 6 | A & C & D & J<br>1999.1-<br>INC.3-6,8 & etc.<br>GRD=4 |
| S11 | Z-1-87811-576-0 | | LINER SET | ﾗｲﾅｾｯﾄ | 6 | B<br>-1996.8<br>INC.3-6,8 & etc.<br>GRD=4 |
| - | Z-1-87811-798-0 | | LINER SET | ﾗｲﾅｾｯﾄ | 6 | B<br>1996.9-1998.1<br>INC.3-6,8 & etc.<br>GRD=4 |
| - | Z-1-87811-906-0 | | LINER SET | ﾗｲﾅｾｯﾄ | 6 | B<br>1998.2-1998.12<br>INC.3-6,8 & etc.<br>GRD=4 |
| - | Z-1-87811-965-0 | | LINER SET | ﾗｲﾅｾｯﾄ | 6 | B<br>1999.1-<br>INC.3-6,8 & etc.<br>GRD=4 |
| S12 | Z-1-87811-891-0 | | LINER SET | ﾗｲﾅｾｯﾄ | 6 | E & F & G & H & K<br>-1998.12<br>INC.3-6,8 & etc.<br>GRD=4 |
| - | Z-1-87811-957-0 | | LINER SET | ﾗｲﾅｾｯﾄ | 6 | E & F & G & H & K<br>1999.1-<br>INC.3-6,8 & etc.<br>GRD=4 |
| 1 | Z-1-11510-074-3 | | METAL KIT | ﾒﾀﾙｷｯﾄ | 1 | INC.2<br>STD |
| - | Z-1-11530-074-1 | | METAL KIT | ﾒﾀﾙｷｯﾄ | 1 | INC.2<br>U.S.=0.25mm |
| - | Z-1-11540-074-1 | | METAL KIT | ﾒﾀﾙｷｯﾄ | 1 | INC.2<br>U.S.=0.50mm |
| 2 | Z-1-11680-001-3 | * | WASHER,THRUST | ﾜｯｼｬ | 2 | |
| 3 | Z-1-12111-769-0 | * | PISTON | ﾋﾟｽﾄﾝ | 6 | A,C,D,J<br>GRD=AX |
| - | Z-1-12111-770-0 | * | PISTON | ﾋﾟｽﾄﾝ | 6 | A,C,D,J<br>GRD=CX |
| - | Z-1-12111-785-0 | * | PISTON | ﾋﾟｽﾄﾝ | 6 | B<br>-1996.8<br>GRD=AX |
| - | Z-1-12111-786-0 | * | PISTON | ﾋﾟｽﾄﾝ | 6 | B<br>-1996.8<br>GRD=CX |

## FIG. 3 CRANKSHAFT,PISTON & FLYWHEEL
クランクシャフト,ピストン&フライホイール

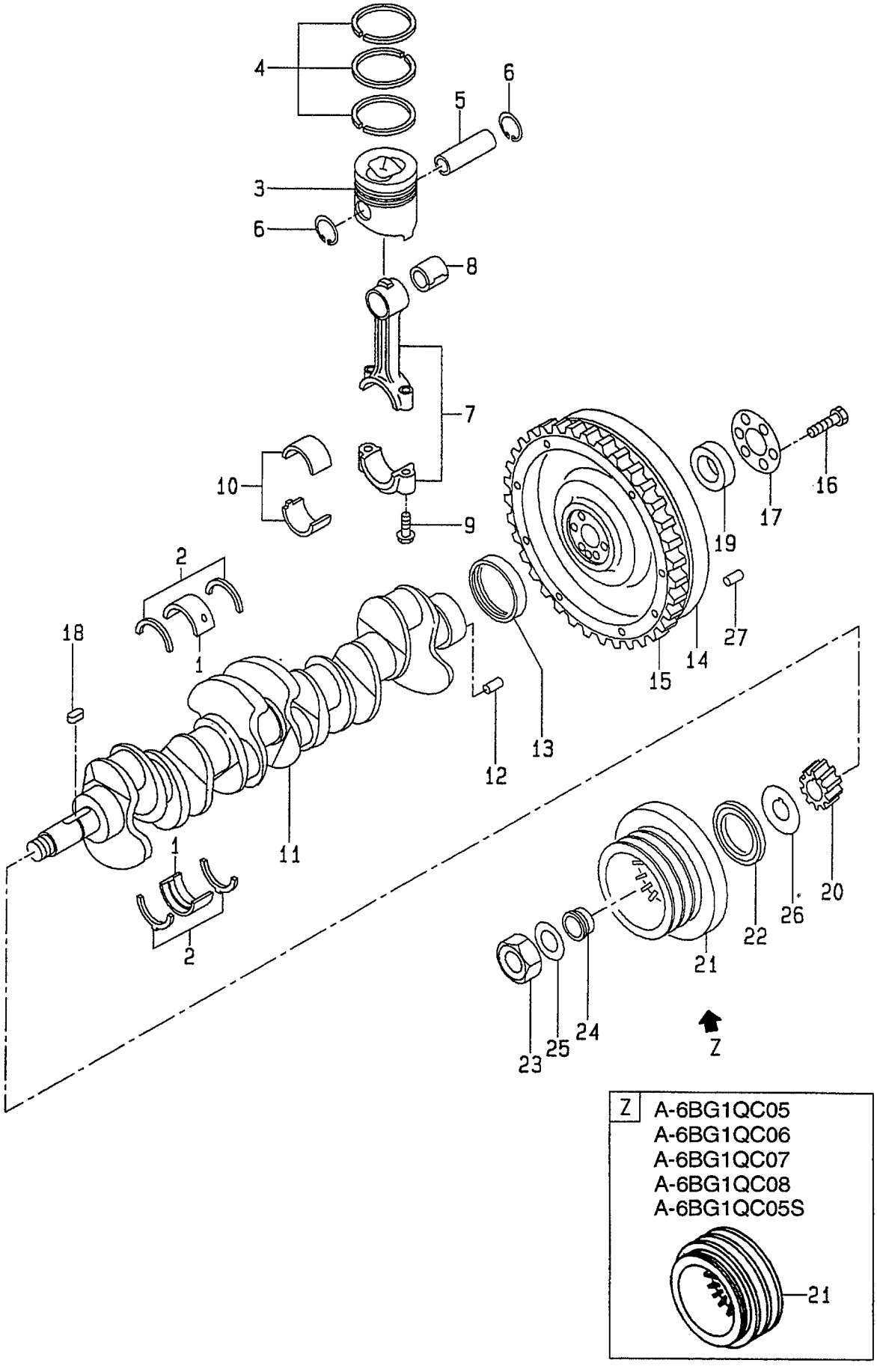

A: A-6BG1QC
B: A-6BG1TQC
C: A-6BG1QC02
D: A-6BG1QC03
E: A-6BG1QC05
F: A-6BG1QC06
G: A-6BG1QC07
H: A-6BG1QC08
J: A-6BG1QC09
K: A-6BG1QC05S

**FIG. 3**

| Item No. 見出番号 | Part No. 部品番号 | Mark 記号 | Description 部品名称 | | Req'd 個数 | Remarks : serial No. 備考：実施号車 |
|---|---|---|---|---|---|---|
| 3 | Z-1-12111-911-0 | * | PISTON | ﾋﾟｽﾄﾝ | 6 | B<br>1996.9-1998.1<br>GRD=AX |
| - | Z-1-12111-912-0 | * | PISTON | ﾋﾟｽﾄﾝ | 6 | B<br>1996.9-1998.1<br>GRD=CX |
| - | Z-1-12111-917-0 | * | PISTON | ﾋﾟｽﾄﾝ | 6 | B<br>1998.2-<br>GRD=AX |
| - | Z-1-12111-918-0 | * | PISTON | ﾋﾟｽﾄﾝ | 6 | B<br>1998.2-<br>GRD=CX |
| - | Z-1-12111-932-0 | * | PISTON | ﾋﾟｽﾄﾝ | 6 | E,F,G,H,K<br>GRD=AX |
| - | Z-1-12111-933-0 | * | PISTON | ﾋﾟｽﾄﾝ | 6 | E,F,G,H,K<br>GRD=CX |
| 4 | Z-1-12121-101-1 | * | RING SET | ﾘﾝｸﾞｾｯﾄ | 6 | A,C,D,E,F,G,H,J,K |
| - | Z-1-12121-115-0 | * | RING SET | ﾘﾝｸﾞｾｯﾄ | 6 | B |
| 5 | Z-9-12211-604-1 | * | PIN,PISTON | ﾋﾟﾝ | 6 | A,C,D,E,F,G,H,J,K |
| - | Z-1-12211-033-2 | * | PIN,PISTON | ﾋﾟﾝ | 6 | B |
| 6 | Z-8-94107-575-1 | * | RING,SNAP | ﾘﾝｸﾞ | 12 | |
| 7 | Z-1-12230-104-1 | | ROD | ﾛｯﾄﾞ | 6 | A,C,D,E,F,G,H,J,K<br>INC.8,9 |
| - | Z-1-12230-129-1 | | ROD,CONNECTING | ﾛｯﾄﾞ | 6 | B<br>INC.8,9 |
| 8 | Z-1-12251-027-0 | * | BUSHING | ﾌﾞｯｼﾝｸﾞ | 6 | A,C,D,E,F,G,H,J,K |
| - | Z-1-12251-032-0 | * | BUSHING | ﾌﾞｯｼﾝｸﾞ | 6 | B |
| 9 | Z-1-12235-027-1 | | BOLT | ﾎﾞﾙﾄ | 12 | |
| 10 | Z-9-12271-608-0 | | METAL SET | ﾒﾀﾙｾｯﾄ | 6 | STD |
| - | Z-9-12273-608-0 | | METAL SET | ﾒﾀﾙｾｯﾄ | 6 | U.S.=0.25mm |
| - | Z-9-12274-608-0 | | METAL SET | ﾒﾀﾙｾｯﾄ | 6 | U.S.=0.50mm |
| 11 | Z-1-12310-448-0 | | CRANKSHAFT | ｸﾗﾝｸｼｬﾌﾄ | 1 | A,C,D,E,F,G,H,J,K<br>INC.12 |
| - | Z-1-12310-470-0 | | CRANKSHAFT | ｸﾗﾝｸｼｬﾌﾄ | 1 | B<br>INC.12 |
| 12 | Z-9-0815-1220-0 | | PIN,STRAIGHT | ﾋﾟﾝ | 1 | |
| 13 | Z-5-12319-003-2 | | RING,WEAR | ﾘﾝｸﾞ | 1 | |
| 14 | Z-1-12331-178-4 | | FLYWHEEL | ﾌﾗｲﾎｲｰﾙ | 1 | A,B |
| - | Z-1-12331-149-5 | | FLYWHEEL | ﾌﾗｲﾎｲｰﾙ | 1 | C,D,J |
| - | Z-5-12331-045-3 | | FLYWHEEL | ﾌﾗｲﾎｲｰﾙ | 1 | E,F,H |
| - | Z-5-12331-052-4 | | FLYWHEEL | ﾌﾗｲﾎｲｰﾙ | 1 | G |
| - | Z-1-12331-267-0 | | FLYWHEEL | ﾌﾗｲﾎｲｰﾙ | 1 | K |
| 15 | Z-9-12333-607-0 | | GEAR,RING | ｷﾞﾔｰ | 1 | A & C & D & J<br>-1999.10 |
| - | Z-8-94393-132-0 | | GEAR;RING | ｷﾞﾔｰ | 1 | A & C & D & J<br>1999.11- |
| - | Z-9-12333-607-0 | | GEAR,RING | ｷﾞﾔｰ | 1 | B<br>-1999.4 |
| - | Z-1-12333-017-0 | | GEAR,RING | ｷﾞﾔｰ | 1 | B<br>1999.5-2001.1 |

## FIG. 3 CRANKSHAFT,PISTON & FLYWHEEL
クランクシャフト,ピストン&フライホイール

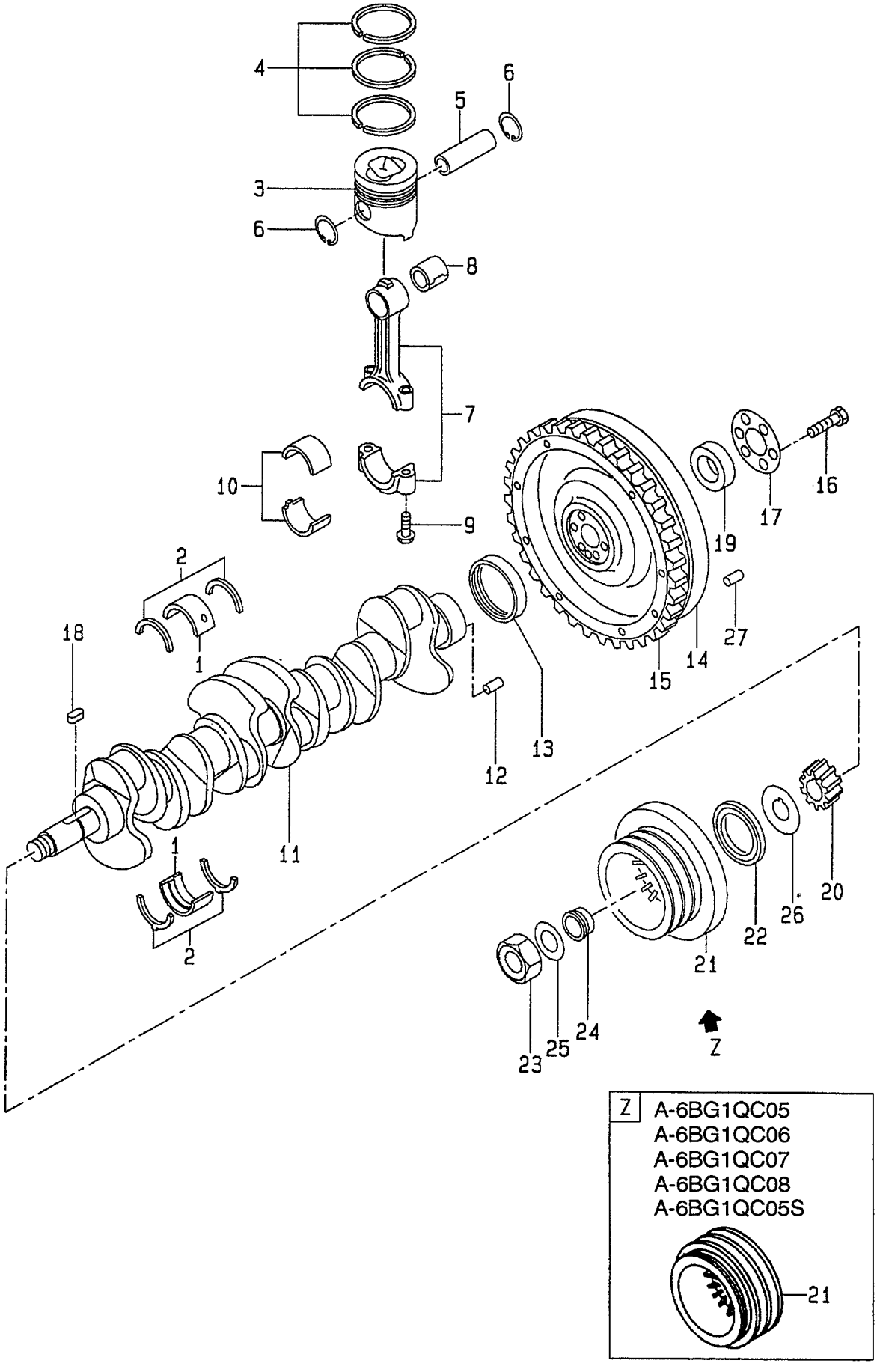

A: A-6BG1QC
B: A-6BG1TQC
C: A-6BG1QC02
D: A-6BG1QC03
E: A-6BG1QC05
F: A-6BG1QC06
G: A-6BG1QC07
H: A-6BG1QC08
J: A-6BG1QC09
K: A-6BG1QC05S

**FIG. 3**

| Item No. 見出番号 | Part No. 部品番号 | Mark 記号 | Description 部品名称 | | Req'd 個数 | Remarks : serial No. 備考：実施号車 |
|---|---|---|---|---|---|---|
| 15 | Z-8-94393-132-0 | | GEAR,RING | ｷﾞﾔｰ | 1 | B<br>2001.2- |
| - | Z-9-12333-607-0 | | GEAR,RING | ｷﾞﾔｰ | 1 | E & F & G & H<br>-2000.8 |
| - | Z-8-94393-132-0 | | GEAR,RING | ｷﾞﾔｰ | 1 | E & F & G & H<br>2000.9- |
| - | Z-1-12333-017-0 | | GEAR,RING | ｷﾞﾔｰ | 1 | K |
| 16 | Z-9-09801-334-0 | | BOLT | ﾎﾞﾙﾄ | 6 | A,B,C,D,J |
| - | Z-9-9206-1638-0 | | BOLT | ﾎﾞﾙﾄ | 6 | E,F,G,H,K |
| 17 | Z-5-12336-008-1 | | WASHER | ﾜｯｼｬ | 1 | |
| 18 | Z-5-09738-001-0 | | KEY | ｷｰ | 1 | |
| 19 | Z-1-09330-077-1 | | BUSHING | ﾌﾞｯｼﾝｸﾞ | 1 | A,B |
| - | Z-1-09800-214-0 | | BEARING,BALL | ﾍﾞｱﾘﾝｸﾞ | 1 | C,D,E,F,G,H,J,K |
| 20 | Z-9-12521-043-0 | | GEAR,CRANKSHAFT | ｷﾞﾔｰ | 1 | A<br>-1995.10 |
| - | Z-1-12521-008-0 | | GEAR,CRANKSHAFT | ｷﾞﾔｰ | 1 | A<br>1995.11-1998.5 |
| - | Z-1-12521-008-0 | | GEAR,CRANKSHAFT | ｷﾞﾔｰ | 1 | B<br>-1998.5 |
| - | Z-8-97137-910-1 | | GEAR,CRANKSHAFT | ｷﾞﾔｰ | 1 | A & B<br>1998.6- |
| - | Z-8-97137-910-1 | | GEAR,CRANKSHAFT | ｷﾞﾔｰ | 1 | C,D,E,F,G,H,J,K |
| 21 | Z-1-12371-158-0 | | PULLEY | ﾌﾟｰﾘ | 1 | A & B<br>-1997.1 |
| - | Z-1-12371-248-0 | | PULLEY | ﾌﾟｰﾘ | 1 | A & B<br>1997.2- |
| - | Z-1-12371-242-0 | | PULLEY | ﾌﾟｰﾘ | 1 | C,D,J |
| - | Z-1-12371-364-1 | | PULLEY | ﾌﾟｰﾘ | 1 | E,F,G,H,K |
| 22 | Z-5-12362-003-1 | | THROWER | ｽﾛﾜ | 1 | A,B,C,D,J |
| 23 | Z-9-09840-107-1 | | NUT | ﾅｯﾄ | 1 | |
| 24 | Z-9-12379-045-0 | | BUSHING | ﾌﾞｯｼﾝｸﾞ | 1 | |
| 25 | Z-9-09851-431-0 | | WASHER | ﾜｯｼｬ | 1 | |
| 26 | Z-1-12362-003-1 | | THROWER,OIL | ｽﾛﾜ | 1 | |
| 27 | Z-9-0815-1022-0 | | PIN | ﾋﾟﾝ | 2 | C,D,E,F,G,H,J,K |

**FIG. 4 GEAR CASE**
**ギヤーケース**

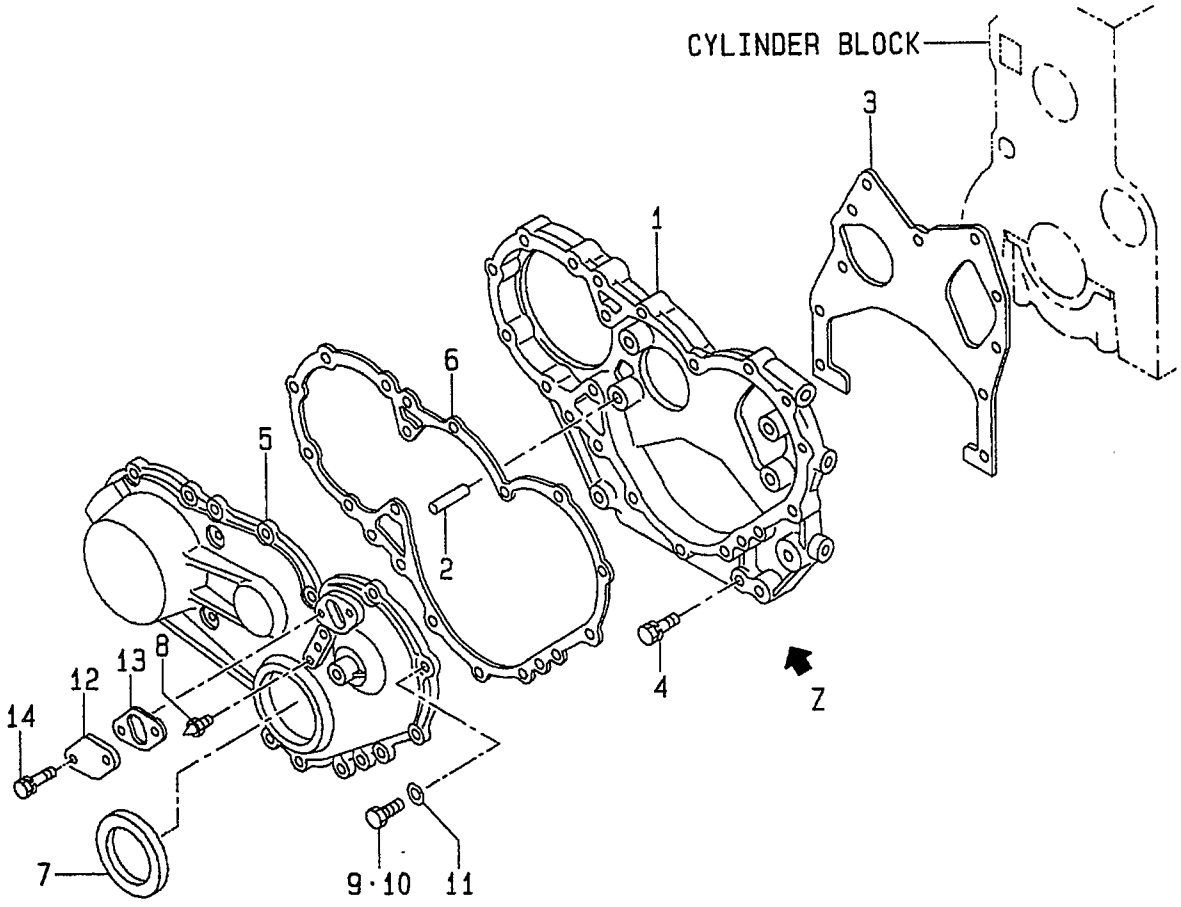


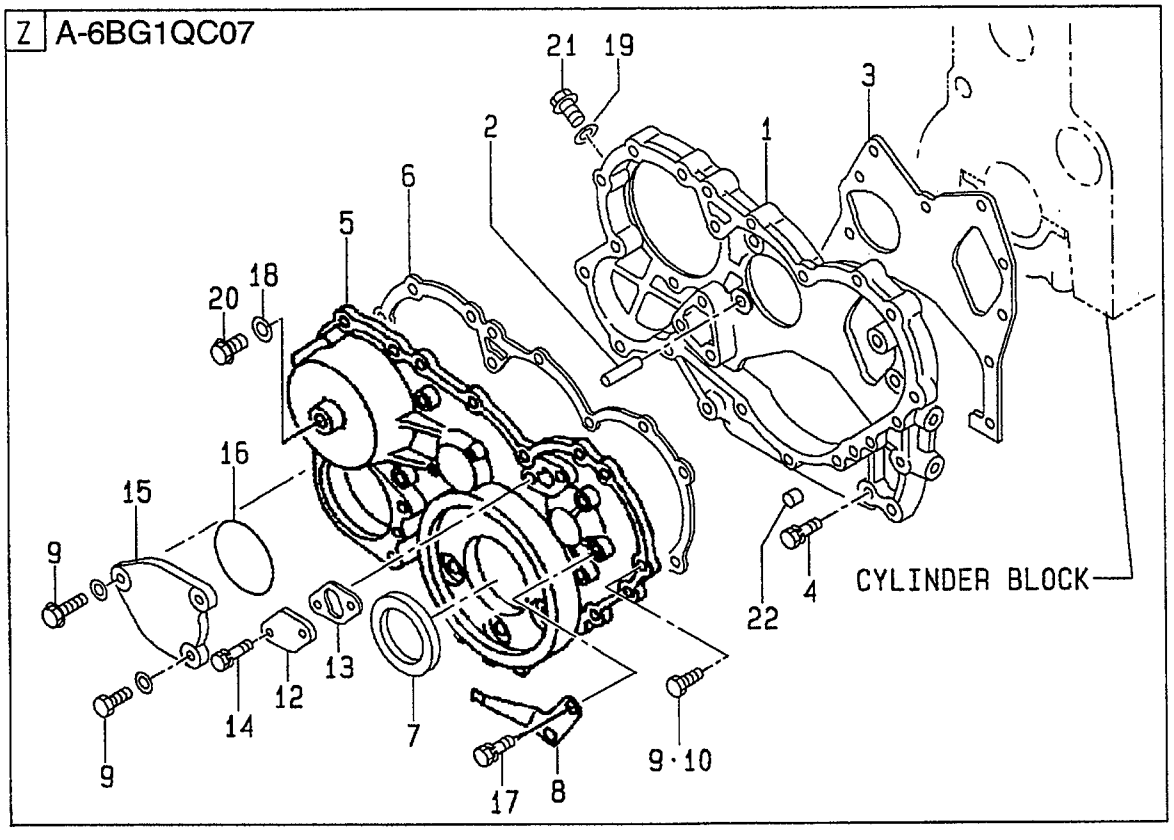

A: A-6BG1QC
B: A-6BG1TQC
C: A-6BG1QC02
D: A-6BG1QC03
E: A-6BG1QC05
F: A-6BG1QC06
G: A-6BG1QC07
H: A-6BG1QC08
J: A-6BG1QC09
K: A-6BG1QC05S

**FIG. 4**

| Item No. 見出番号 | Part No. 部品番号 | Mark 記号 | Description 部品名称 | | Req'd 個数 | Remarks : serial No. 備考：実施号車 |
|---|---|---|---|---|---|---|
| K1 | Z-1-87811-031-5 | | ENGINE OVERHAUL REPAIR KIT | ｴﾝｼﾞﾝｵｰﾊﾞﾎｰﾙ ﾘﾍﾟｱｰｷｯﾄ | 1 | A INC.3,6,7& etc. |
| K2 | Z-1-87811-223-3 | | ENGINE OVERHAUL REPAIR KIT | ｴﾝｼﾞﾝｵｰﾊﾞﾎｰﾙ ﾘﾍﾟｱｰｷｯﾄ | 1 | B INC.3,6,7& etc. |
| K3 | Z-1-87811-628-3 | | ENGINE OVERHAUL REPAIR KIT | ｴﾝｼﾞﾝｵｰﾊﾞﾎｰﾙ ﾘﾍﾟｱｰｷｯﾄ | 1 | C,D,E,F,H,J,K INC.3,6,7& etc. |
| K4 | Z-1-87811-887-1 | | ENGINE OVERHAUL REPAIR KIT | ｴﾝｼﾞﾝｵｰﾊﾞﾎｰﾙ ﾘﾍﾟｱｰｷｯﾄ | 1 | G INC.3,6,7& etc. |
| 1 | Z-5-11311-011-3 | | CASE,TIMING GEAR | ｹｰｽ | 1 | A,B,C,D,E,F,H,J,K |
| - | Z-8-94457-910-2 | | CASE,TIMING GEAR | ｹｰｽ | 1 | G |
| 2 | Z-9-0815-1018-0 | | PIN,STRAIGHT | ﾋﾟﾝ | 1 | |
| 3 | Z-8-94370-671-0 | * | PACKING | ﾊﾟｯｷﾝｸﾞ | 1 | |
| 4 | Z-0-5004-0845-0 | | BOLT | ﾎﾞﾙﾄ | 2 | A & B -1997.4 |
| - | Z-0-2808-0845-0 | | BOLT | ﾎﾞﾙﾄ | 2 | A & B 1997.5- |
| - | Z-0-5004-0820-0 | | BOLT | ﾎﾞﾙﾄ | 4 | A & B -1997.4 |
| - | Z-0-2868-0820-0 | | BOLT | ﾎﾞﾙﾄ | 4 | A & B 1997.5- |
| - | Z-0-2808-0845-0 | | BOLT | ﾎﾞﾙﾄ | 2 | C,D,E,F,G,H,J,K |
| - | Z-0-2868-0820-0 | | BOLT | ﾎﾞﾙﾄ | 4 | C,D,E,F,G,H,J,K |
| 5 | Z-1-11321-079-0 | | COVER | ｶﾊﾞｰ | 1 | A,B,C,D,E,F,H,J,K |
| - | Z-8-94371-853-2 | | COVER | ｶﾊﾞｰ | 1 | G |
| 6 | Z-8-97022-216-0 | * | PACKING | ﾊﾟｯｷﾝｸﾞ | 1 | A & B & C & D & E & F & H & J & K -2000.12 |
| - | Z-1-11322-060-0 | * | PACKING | ﾊﾟｯｷﾝｸﾞ | 1 | A & B & C & D & E & F & H & J & K 2001.1- |
| - | Z-8-94370-672-0 | * | PACKING | ﾊﾟｯｷﾝｸﾞ | 1 | G -2001.1 |
| - | Z-8-97233-301-0 | * | PACKING | ﾊﾟｯｷﾝｸﾞ | 1 | G 2001.2- |
| 7 | Z-1-09625-438-0 | * | SEAL,OIL | ｼｰﾙ | 1 | |
| 8 | Z-5-11327-009-0 | | POINTER,TIMING | ﾎﾟｲﾝﾀ | 1 | A,B,C,D,J |
| - | Z-5-11327-009-0 | | POINTER,TIMING | ﾎﾟｲﾝﾀ | 1 | E & F & H & K -2001.2 |
| - | Z-5-11327-003-0 | | POINTER,TIMING | ﾎﾟｲﾝﾀ | 1 | E & F & H & K 2001.3- |
| - | Z-1-11327-036-0 | | POINTER,TIMING | ﾎﾟｲﾝﾀ | 1 | G |
| 9 | Z-0-5014-0825-0 | | BOLT | ﾎﾞﾙﾄ | 7 | A & B -1997.4 |
| - | Z-0-2868-0825-0 | | BOLT | ﾎﾞﾙﾄ | 7 | A & B 1997.5- |
| - | Z-0-2868-0825-0 | | BOLT | ﾎﾞﾙﾄ | 7 | C,D,E,F,H,J,K |
| - | Z-0-2868-0825-0 | | BOLT | ﾎﾞﾙﾄ | 8 | G |
| 10 | Z-5-09000-084-1 | | BOLT | ﾎﾞﾙﾄ | 5 | A & B -1997.4 |

**FIG. 4 GEAR CASE**
**ギヤーケース**

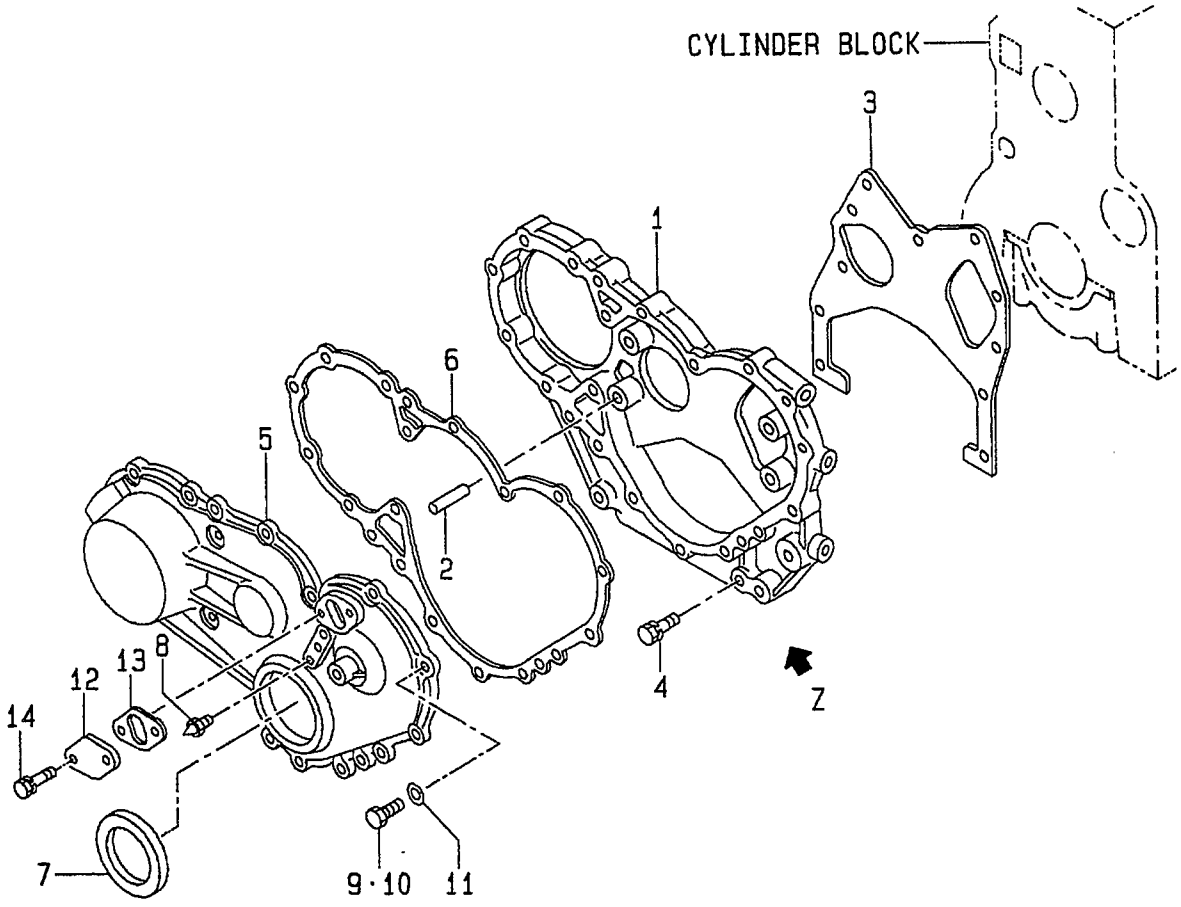


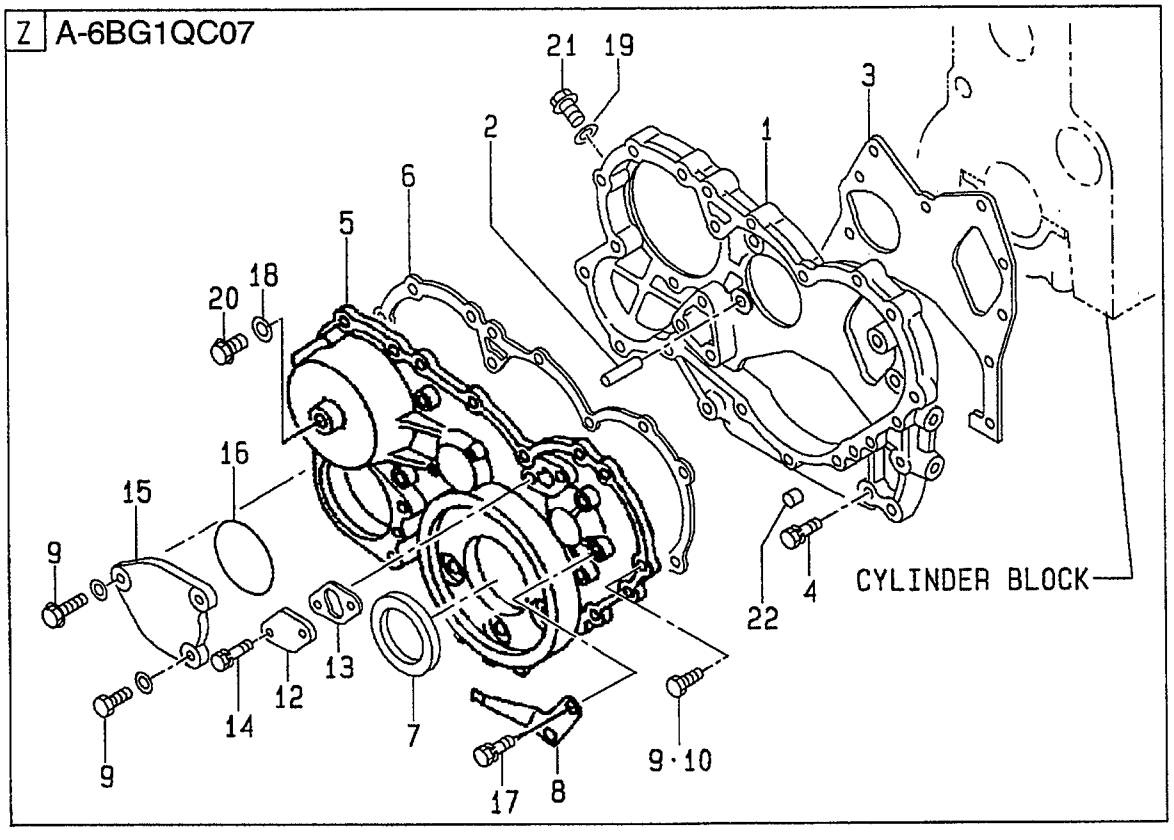

A: A-6BG1QC
B: A-6BG1TQC
C: A-6BG1QC02
D: A-6BG1QC03
E: A-6BG1QC05
F: A-6BG1QC06
G: A-6BG1QC07
H: A-6BG1QC08
J: A-6BG1QC09
K: A-6BG1QC05S

**FIG. 4**

| Item No. 見出番号 | Part No. 部品番号 | Mark 記号 | Description 部品名称 | | Req'd 個数 | Remarks : serial No. 備考：実施号車 |
|---|---|---|---|---|---|---|
| 10 | Z-0-2808-0850-0 | | BOLT | ﾎﾞﾙﾄ | 5 | A & B 1997.5- |
| - | Z-0-2808-0850-0 | | BOLT | ﾎﾞﾙﾄ | 5 | C,D,E,F,G,H,J,K |
| 11 | Z-9-0916-0508-0 | | WASHER | ﾜｯｼｬ | 5 | A & B -1997.4 |
| 12 | Z-5-11321-009-0 | | COVER | ｶﾊﾞｰ | 2 | |
| 13 | Z-8-97027-601-1 | | PACKING | ﾊﾟｯｷﾝｸﾞ | 2 | |
| 14 | Z-0-5004-0614-0 | | BOLT | ﾎﾞﾙﾄ | 4 | A & B -1997.4 |
| - | Z-0-2808-0612-0 | | BOLT | ﾎﾞﾙﾄ | 4 | A & B 1997.5- |
| - | Z-0-2808-0612-0 | | BOLT | ﾎﾞﾙﾄ | 4 | C,D,E,F,G,H,J,K |
| 15 | Z-5-11321-095-4 | | COVER | ｶﾊﾞｰ | 1 | G |
| 16 | Z-1-09623-283-0 | | O RING | Oﾘﾝｸﾞ | 1 | G |
| 17 | Z-0-5004-0612-0 | | BOLT | ﾎﾞﾙﾄ | 2 | G |
| 18 | Z-9-0957-1410-0 | | GASKET | ｶﾞｽｹｯﾄ | 1 | G |
| 19 | Z-9-0957-1416-0 | | PACKING | ﾊﾟｯｷﾝｸﾞ | 1 | G |
| 20 | Z-1-09604-074-0 | | PLUG | ﾌﾟﾗｸﾞ | 1 | G |
| 21 | Z-1-09009-119-0 | | PLUG | ﾌﾟﾗｸﾞ | 1 | G |
| 22 | Z-9-11229-058-1 | | DOWEL | ﾀﾞｳｴﾙ | 1 | G |

## FIG. 5 FLYWHEEL HOUSING
フライホイールハウジング

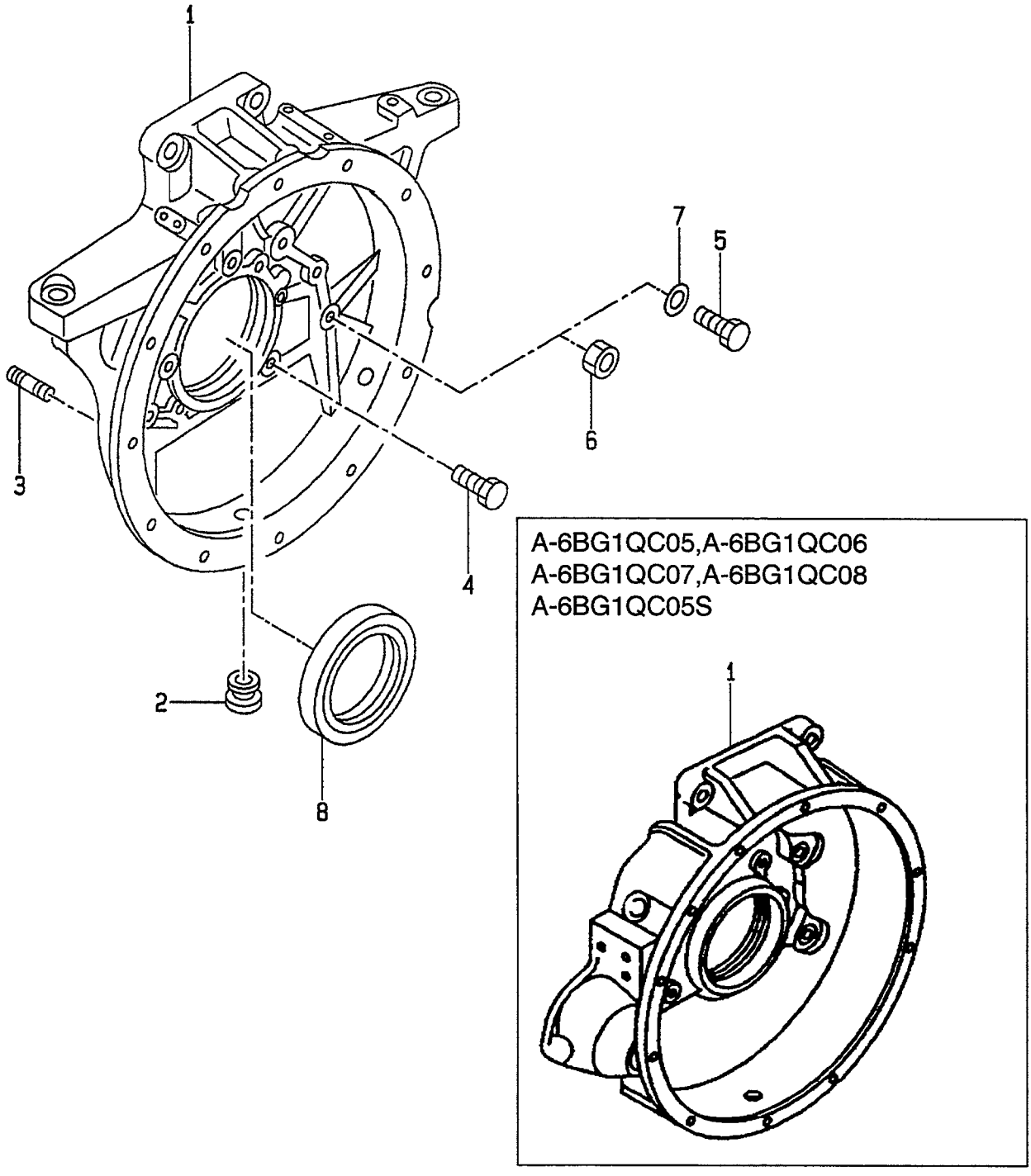

A: A-6BG1QC
B: A-6BG1TQC
C: A-6BG1QC02
D: A-6BG1QC03
E: A-6BG1QC05
F: A-6BG1QC06
G: A-6BG1QC07
H: A-6BG1QC08
J: A-6BG1QC09
K: A-6BG1QC05S

**FIG. 5**

| Item No. 見出番号 | Part No. 部品番号 | Mark 記号 | Description 部品名称 | | Req'd 個数 | Remarks : serial No. 備考：実施号車 |
|---|---|---|---|---|---|---|
| K1 | Z-1-87811-031-5 | | ENGINE OVERHAUL REPAIR KIT | ｴﾝｼﾞﾝｵｰﾊﾞﾎｰﾙ ﾘﾍﾟｱｰｷｯﾄ | 1 | A INC.8 & etc. |
| K2 | Z-1-87811-223-3 | | ENGINE OVERHAUL REPAIR KIT | ｴﾝｼﾞﾝｵｰﾊﾞﾎｰﾙ ﾘﾍﾟｱｰｷｯﾄ | 1 | B INC.8 & etc. |
| K3 | Z-1-87811-628-3 | | ENGINE OVERHAUL REPAIR KIT | ｴﾝｼﾞﾝｵｰﾊﾞﾎｰﾙ ﾘﾍﾟｱｰｷｯﾄ | 1 | C,D,E,F,H,J,K INC.8 & etc. |
| K4 | Z-1-87811-887-1 | | ENGINE OVERHAUL REPAIR KIT | ｴﾝｼﾞﾝｵｰﾊﾞﾎｰﾙ ﾘﾍﾟｱｰｷｯﾄ | 1 | G INC.8 & etc. |
| 1 | Z-1-11341-433-2 | | HOUSING,FLYWHEEL | ﾊｳｼﾞﾝｸﾞ | 1 | A & C & D & J -2000.2 |
| - | Z-1-11341-433-3 | | HOUSING,FLYWHEEL | ﾊｳｼﾞﾝｸﾞ | 1 | B -2000.2 |
| - | Z-1-11341-582-0 | | HOUSING,FLYWHEEL | ﾊｳｼﾞﾝｸﾞ | 1 | A & B & C & D & J 2000.3- |
| - | Z-8-94364-869-2 | | HOUSING,FLYWHEEL | ﾊｳｼﾞﾝｸﾞ | 1 | E,F,G,H,K |
| 2 | Z-5-09333-035-0 | | GROMMET | ｸﾞﾛﾒｯﾄ | 1 | A,B |
| 3 | Z-9-9441-1235-0 | | STUD | ｽﾀｯﾄﾞ | 3 | |
| 4 | Z-0-5004-0825-0 | | BOLT | ﾎﾞﾙﾄ | 7 | |
| 5 | Z-9-9106-6450-0 | | BOLT | ﾎﾞﾙﾄ | 5 | A & B -1997.1 |
| - | Z-0-2889-1445-0 | | BOLT | ﾎﾞﾙﾄ | 5 | A & B 1997.2- |
| - | Z-9-9106-6465-0 | | BOLT | ﾎﾞﾙﾄ | 2 | A & B -1997.1 |
| - | Z-0-2889-1460-0 | | BOLT | ﾎﾞﾙﾄ | 2 | A & B 1997.2- |
| - | Z-0-2889-1445-0 | | BOLT | ﾎﾞﾙﾄ | 5 | C,D,E,F,G,H,J,K |
| - | Z-0-2889-1460-0 | | BOLT | ﾎﾞﾙﾄ | 2 | C,D,E,F,G,H,J,K |
| 6 | Z-9-9911-0414-0 | | NUT | ﾅｯﾄ | 1 | A & B -1997.3 |
| - | Z-0-9116-0214-0 | | NUT | ﾅｯﾄ | 1 | A & B 1997.4- |
| - | Z-0-9116-0214-0 | | NUT | ﾅｯﾄ | 1 | C,D,E,F,G,H,J,K |
| 7 | Z-9-09651-069-0 | | WASHER | ﾜｯｼｬ | 8 | A & B -1997.1 |
| 8 | Z-1-09625-439-1 | * | SEAL,OIL | ｼｰﾙ | 1 | A & B & C & D & E & F & H & J & K -2000.9 |
| - | Z-8-97072-823-1 | * | SEAL,OIL | ｼｰﾙ | 1 | A & B & C & D & E & F & H & J & K 2000.10- |
| - | Z-1-09625-469-0 | * | SEAL,OIL | ｼｰﾙ | 1 | G |

## FIG. 6 OIL PAN
オイルパン

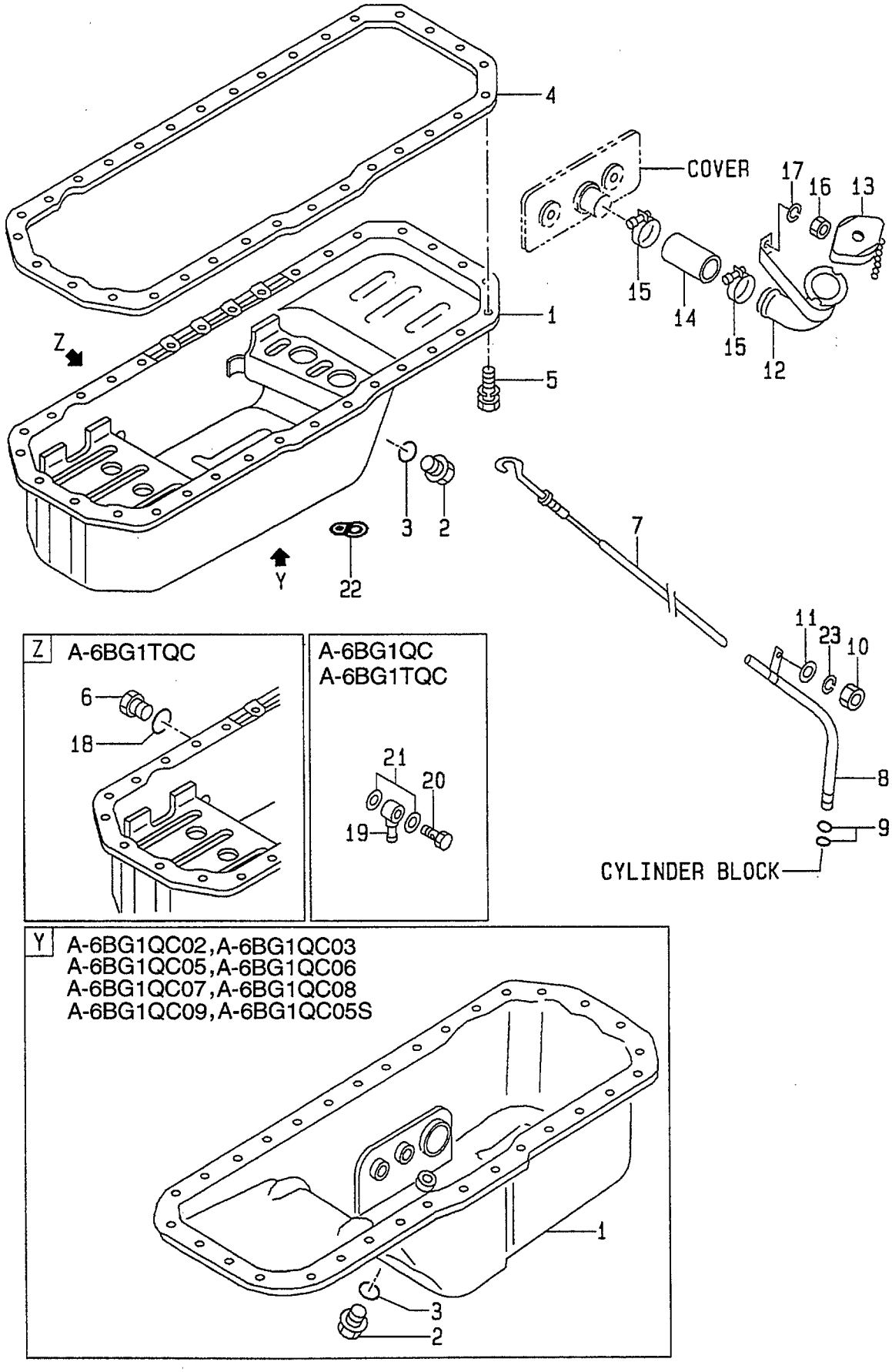

A: A-6BG1QC
B: A-6BG1TQC
C: A-6BG1QC02
D: A-6BG1QC03
E: A-6BG1QC05
F: A-6BG1QC06
G: A-6BG1QC07
H: A-6BG1QC08
J: A-6BG1QC09
K: A-6BG1QC05S

**FIG. 6**

| Item No. 見出番号 | Part No. 部品番号 | Mark 記号 | Description 部品名称 | | Req'd 個数 | Remarks : serial No. 備考：実施号車 |
|---|---|---|---|---|---|---|
| K1 | Z-1-87811-031-5 | | ENGINE OVERHAUL REPAIR KIT | ｴﾝｼﾞﾝｵｰﾊﾞﾎｰﾙ ﾘﾍﾟｱｰｷｯﾄ | 1 | A INC.3,4 & etc. |
| K2 | Z-1-87811-223-3 | | ENGINE OVERHAUL REPAIR KIT | ｴﾝｼﾞﾝｵｰﾊﾞﾎｰﾙ ﾘﾍﾟｱｰｷｯﾄ | 1 | B INC.3,4 & etc. |
| K3 | Z-1-87811-628-3 | | ENGINE OVERHAUL REPAIR KIT | ｴﾝｼﾞﾝｵｰﾊﾞﾎｰﾙ ﾘﾍﾟｱｰｷｯﾄ | 1 | C,D,E,F,H,J,K INC.3,4 & etc. |
| K4 | Z-1-87811-887-1 | | ENGINE OVERHAUL REPAIR KIT | ｴﾝｼﾞﾝｵｰﾊﾞﾎｰﾙ ﾘﾍﾟｱｰｷｯﾄ | 1 | G INC.3,4 & etc. |
| 1 | Z-1-11360-439-2 | | PAN,OIL | ﾊﾟﾝ | 1 | A,B INC.2,3 |
| - | Z-5-11360-377-1 | | PAN,OIL | ﾊﾟﾝ | 1 | C,D,E,F,G,H,J,K INC.2,3 |
| 2 | Z-1-09604-022-0 | | PLUG | ﾌﾟﾗｸﾞ | 1 | A,B |
| - | Z-9-09662-012-0 | | PLUG | ﾌﾟﾗｸﾞ | 1 | C,D,E,F,G,H,J,K |
| 3 | Z-1-09623-179-0 | * | O RING | Oﾘﾝｸﾞ | 1 | A,B |
| - | Z-1-09623-057-0 | * | O RING | Oﾘﾝｸﾞ | 1 | C,D,E,F,G,H,J,K |
| 4 | Z-1-11367-100-0 | * | PACKING | ﾊﾟｯｷﾝｸﾞ | 1 | |
| 5 | Z-0-5004-0818-0 | | BOLT | ﾎﾞﾙﾄ | 32 | |
| 6 | Z-8-94152-613-0 | | PLUG | ﾌﾟﾗｸﾞ | 2 | B |
| 7 | Z-1-11760-280-2 | | GAUGE,OIL LEVEL | ｹﾞｰｼﾞ | 1 | A,B |
| - | Z-1-11760-378-0 | | GAUGE,OIL LEVEL | ｹﾞｰｼﾞ | 1 | C,D,E,F,G,H,J,K |
| 8 | Z-1-11766-274-1 | | TUBE,GUIDE | ﾁｭｰﾌﾞ | 1 | A,B INC.9 |
| - | Z-1-11766-402-0 | | TUBE,GUIDE | ﾁｭｰﾌﾞ | 1 | C,D,E,F,G,H,J,K INC.9 |
| 9 | Z-5-09623-002-0 | | O RING | Oﾘﾝｸﾞ | 2 | |
| 10 | Z-9-0911-0508-0 | | NUT | ﾅｯﾄ | 2 | A,B |
| - | Z-9-0911-0508-0 | | NUT | ﾅｯﾄ | 1 | C,D,E,F,G,H,J,K |
| 11 | Z-9-0916-0508-0 | | WASHER | ﾜｯｼｬ | 2 | A |
| - | Z-9-0916-0508-0 | | WASHER | ﾜｯｼｬ | 1 | B |
| 12 | Z-1-11740-204-1 | | FILLER,OIL | ﾌｨﾗ | 1 | A & B -1996.8 INC.13 |
| - | Z-1-11740-174-1 | | FILLER,OIL | ﾌｨﾗ | 1 | A & B 1996.9- INC.13 |
| - | Z-1-11740-201-1 | | FILLER,OIL | ﾌｨﾗ | 1 | C,D,E,F,G,H,J,K INC.13 |
| 13 | Z-1-11750-024-1 | | CAP,OIL FILLER | ｷｬｯﾌﾟ | 1 | A & B -1996.8 |
| - | Z-1-11750-012-0 | | CAP,OIL FILLER | ｷｬｯﾌﾟ | 1 | A & B 1996.9- |
| - | Z-1-11750-024-1 | | CAP,OIL FILLER | ｷｬｯﾌﾟ | 1 | C,D,E,F,G,H,J,K |
| 14 | Z-9-09912-976-1 | | HOSE | ﾎｰｽ | 1 | |
| 15 | Z-9-09915-553-1 | | CLIP | ｸﾘｯﾌﾟ | 2 | |
| 16 | Z-9-0911-0408-0 | | NUT | ﾅｯﾄ | 1 | |
| 17 | Z-9-0915-0508-0 | | WASHER | ﾜｯｼｬ | 1 | |
| 18 | Z-1-09630-085-0 | | PACKING | ﾊﾟｯｷﾝｸﾞ | 2 | B |
| 19 | Z-1-19191-914-0 | | JOINT,DRAIN | ｼﾞｮｲﾝﾄ | 1 | A,B |
| 20 | Z-1-09675-132-0 | | BOLT,EYE | ﾎﾞﾙﾄ | 1 | A,B |

## FIG. 6 OIL PAN
オイルパン

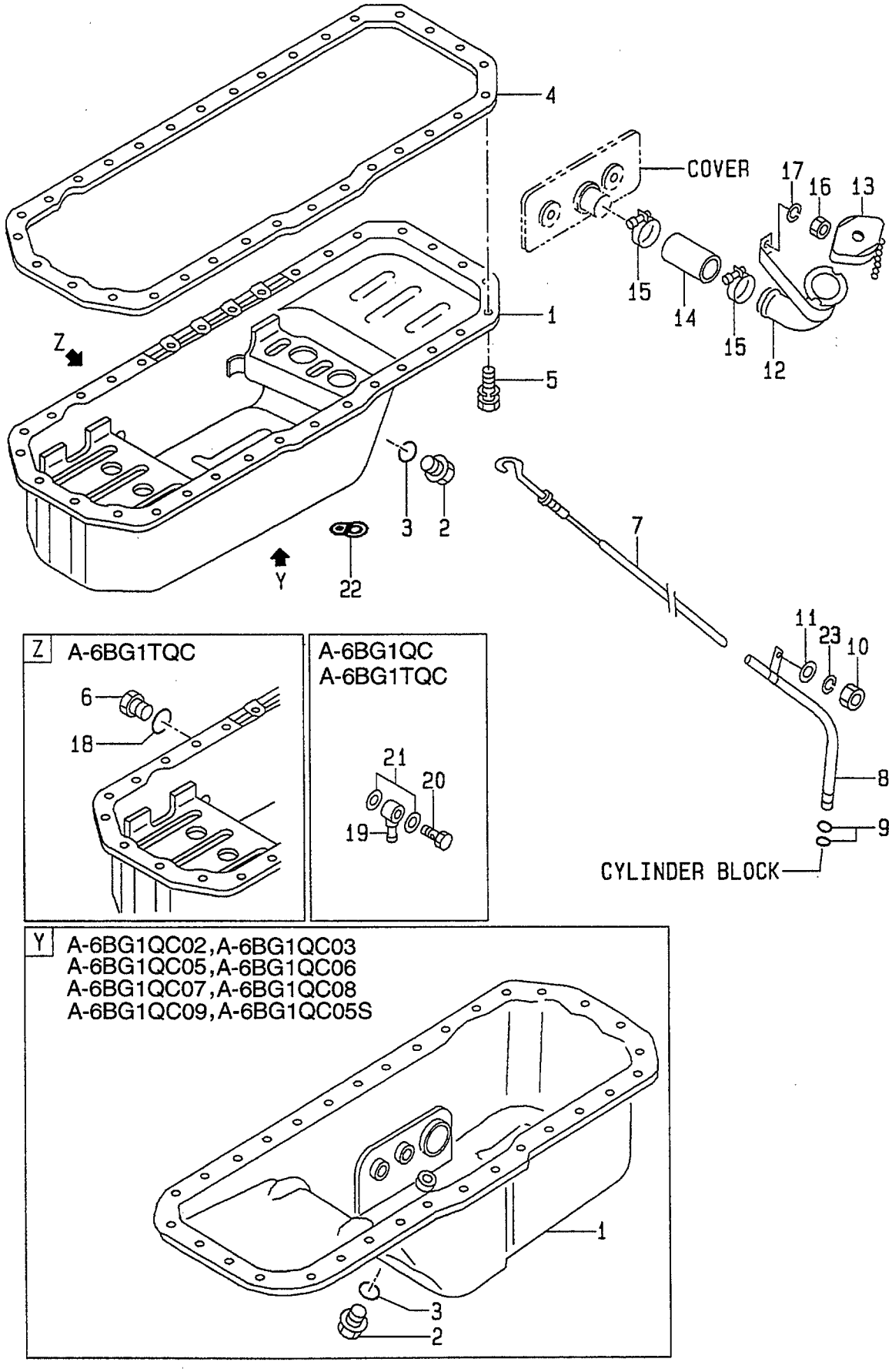

A: A-6BG1QC
B: A-6BG1TQC
C: A-6BG1QC02
D: A-6BG1QC03
E: A-6BG1QC05
F: A-6BG1QC06
G: A-6BG1QC07
H: A-6BG1QC08
J: A-6BG1QC09
K: A-6BG1QC05S

**FIG. 6**

| Item No. 見出番号 | Part No. 部品番号 | Mark 記号 | Description 部品名称 | | Req'd 個数 | Remarks : serial No. 備考：実施号車 |
|---|---|---|---|---|---|---|
| 21 | Z-9-0957-1424-0 | | PACKING | ﾊﾟｯｷﾝｸﾞ | 2 | A,B |
| 22 | Z-9-11229-070-0 | | CLIP | ｸﾘｯﾌﾟ | 1 | C,D |
| 23 | Z-9-0915-0508-0 | | WASHER | ﾜｯｼｬ | 1 | B,C,D,E,F,G,H,J,K |

# FIG. 7 CYLINDER HEAD
シリンダヘッド

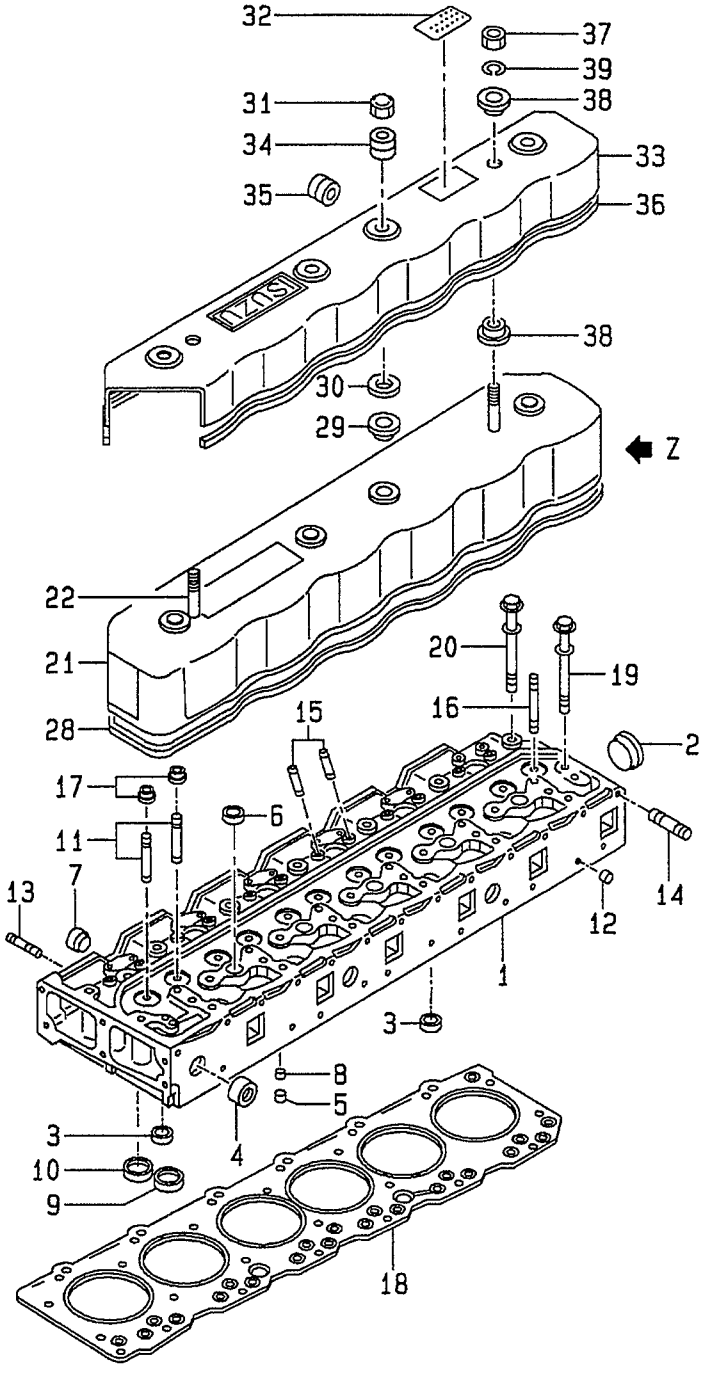


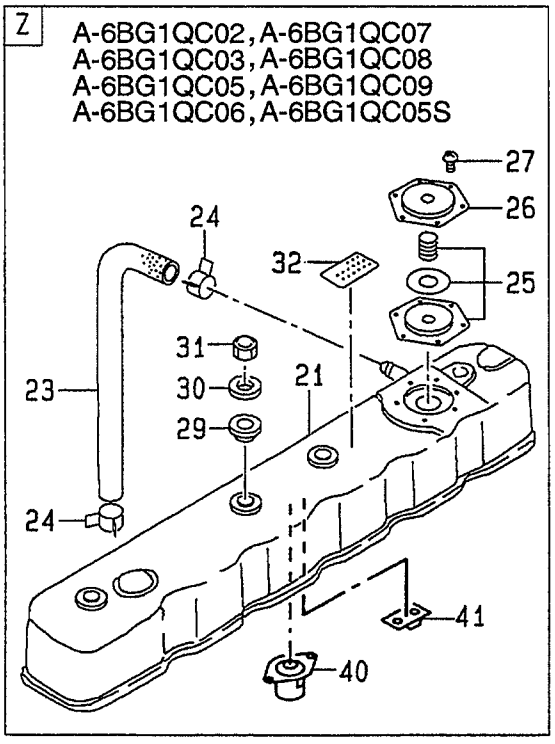


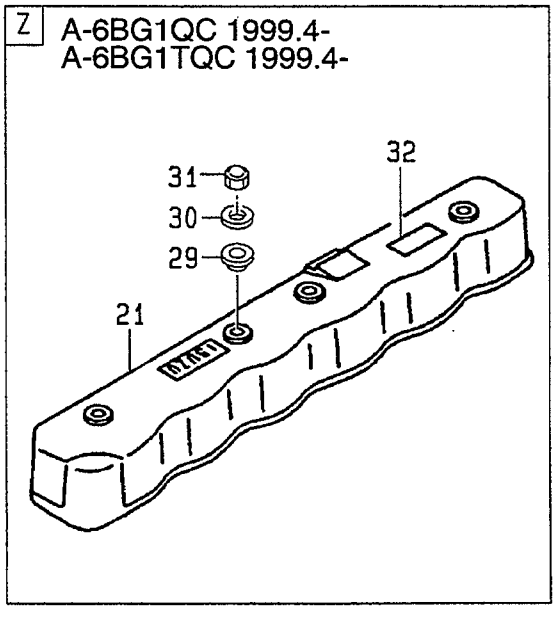

A: A-6BG1QC E: A-6BG1QC05 J: A-6BG1QC09
B: A-6BG1TQC F: A-6BG1QC06 K: A-6BG1QC05S
C: A-6BG1QC02 G: A-6BG1QC07
D: A-6BG1QC03 H: A-6BG1QC08

**FIG. 7**

| Item No. 見出番号 | Part No. 部品番号 | Mark 記号 | Description 部品名称 | | Req'd 個数 | Remarks : serial No. 備考：実施号車 |
|---|---|---|---|---|---|---|
| K1 | Z-1-87811-031-5 | | ENGINE OVERHAUL | ｴﾝｼﾞﾝｵｰﾊﾞﾎｰﾙ | 1 | A |
| | | | REPAIR KIT | ﾘﾍﾟｱｰｷｯﾄ | | INC.17,18,28,29 & etc. |
| K2 | Z-1-87811-223-3 | | ENGINE OVERHAUL | ｴﾝｼﾞﾝｵｰﾊﾞﾎｰﾙ | 1 | B |
| | | | REPAIR KIT | ﾘﾍﾟｱｰｷｯﾄ | | INC.17,18,28,29 & etc. |
| K3 | Z-1-87811-628-3 | | ENGINE OVERHAUL | ｴﾝｼﾞﾝｵｰﾊﾞﾎｰﾙ | 1 | C,D,E,F,H,J,K |
| | | | REPAIR KIT | ﾘﾍﾟｱｰｷｯﾄ | | INC.17,18,28,29 & etc. |
| K4 | Z-1-87811-887-1 | | ENGINE OVERHAUL | ｴﾝｼﾞﾝｵｰﾊﾞﾎｰﾙ | 1 | G |
| | | | REPAIR KIT | ﾘﾍﾟｱｰｷｯﾄ | | INC.17,18,28,29 & etc. |
| K5 | Z-1-87811-242-1 | | ENGINE TOP OVERHAUL | ｴﾝｼﾞﾝﾄｯﾌﾟｵｰﾊﾞﾎｰﾙ | 1 | A,B |
| | | | REPAIR KIT | ﾘﾍﾟｱｰｷｯﾄ | | INC.17,18,28 & etc. |
| K6 | Z-1-87810-945-2 | | ENGINE TOP OVERHAUL | ｴﾝｼﾞﾝﾄｯﾌﾟｵｰﾊﾞﾎｰﾙ | 1 | C,D,E,F,G,H,J,K |
| | | | REPAIR KIT | ﾘﾍﾟｱｰｷｯﾄ | | INC.17,18,28 & etc. |
| 1 | Z-1-11110-614-2 | | HEAD,CYLINDER | ﾍｯﾄﾞ | 1 | A,C,D,E,F,G,H,J,K |
| | | | | | | INC.2-11 |
| - | Z-1-11110-601-1 | | HEAD,CYLINDER | ﾍｯﾄﾞ | 1 | B |
| | | | | | | -1996.9 |
| | | | | | | INC.2-11 |
| - | Z-1-11110-842-0 | | HEAD,CYLINDER | ﾍｯﾄﾞ | 1 | B |
| | | | | | | 1996.10-1999.3 |
| | | | | | | INC.2-11 |
| - | Z-1-11110-614-2 | | HEAD,CYLINDER | ﾍｯﾄﾞ | 1 | B |
| | | | | | | 1999.4- |
| | | | | | | INC.2-11 |
| 2 | Z-1-09600-005-1 | | CUP,SEALING | ｶｯﾌﾟ | 1 | |
| 3 | Z-9-11129-128-0 | | CUP,SEALING | ｶｯﾌﾟ | 3 | |
| 4 | Z-5-11219-015-0 | | CUP,SEALING | ｶｯﾌﾟ | 3 | |
| 5 | Z-5-09600-013-0 | | CUP,SEALING | ｶｯﾌﾟ | 6 | |
| 6 | Z-1-09600-016-0 | | CUP,SEALING | ｶｯﾌﾟ | 5 | |
| 7 | Z-1-09600-016-0 | | CUP,SEALING | ｶｯﾌﾟ | 6 | |
| 8 | Z-9-09660-034-0 | | PLUG | ﾌﾟﾗｸﾞ | 6 | |
| 9 | Z-1-11715-054-0 | | SEAT,INLET VALVE | ｼｰﾄ | 6 | |
| 10 | Z-1-11711-043-0 | | SEAT,EXHAUST VALVE | ｼｰﾄ | 6 | |
| 11 | 20801-0Z131 | | GUIDE,VALVE | ｶﾞｲﾄﾞ | 12 | |
| 12 | Z-9-11129-601-0 | | CUP,SEALING | ｶｯﾌﾟ | 5 | |
| 13 | Z-9-0411-0825-0 | | STUD | ｽﾀｯﾄﾞ | 3 | -2000.3 |
| - | Z-9-0411-0825-0 | | STUD | ｽﾀｯﾄﾞ | 6 | 2000.4- |
| 14 | Z-9-09630-026-0 | | STUD | ｽﾀｯﾄﾞ | 12 | A,C,D,E,F,G,H,J,K |
| - | Z-9-09630-026-0 | | STUD | ｽﾀｯﾄﾞ | 11 | B |
| - | Z-9-09830-078-0 | | STUD | ｽﾀｯﾄﾞ | 1 | B |
| 15 | Z-1-09300-018-0 | | STUD | ｽﾀｯﾄﾞ | 12 | |
| 16 | Z-9-09830-163-0 | | STUD | ｽﾀｯﾄﾞ | 4 | |
| 17 | Z-1-12569-015-0 | * | SEAL,VALVE GUIDE | ｼｰﾙ | 12 | -2001.1 |
| - | Z-8-97120-167-0 | * | SEAL,VALVE GUIDE | ｼｰﾙ | 12 | 2001.2- |
| 18 | Z-1-11141-196-0 | * | GASKET | ｶﾞｽｹｯﾄ | 1 | |
| 19 | Z-1-09070-101-0 | | BOLT | ﾎﾞﾙﾄ | 20 | |
| 20 | Z-1-09070-100-1 | | BOLT | ﾎﾞﾙﾄ | 6 | |
| 21 | Z-1-11180-132-2 | | COVER,CYLINDER HEAD | ｶﾊﾞｰ | 1 | A & B |
| | | | | | | -1999.3 |
| | | | | | | INC.22 |

# FIG. 7 CYLINDER HEAD
シリンダヘッド

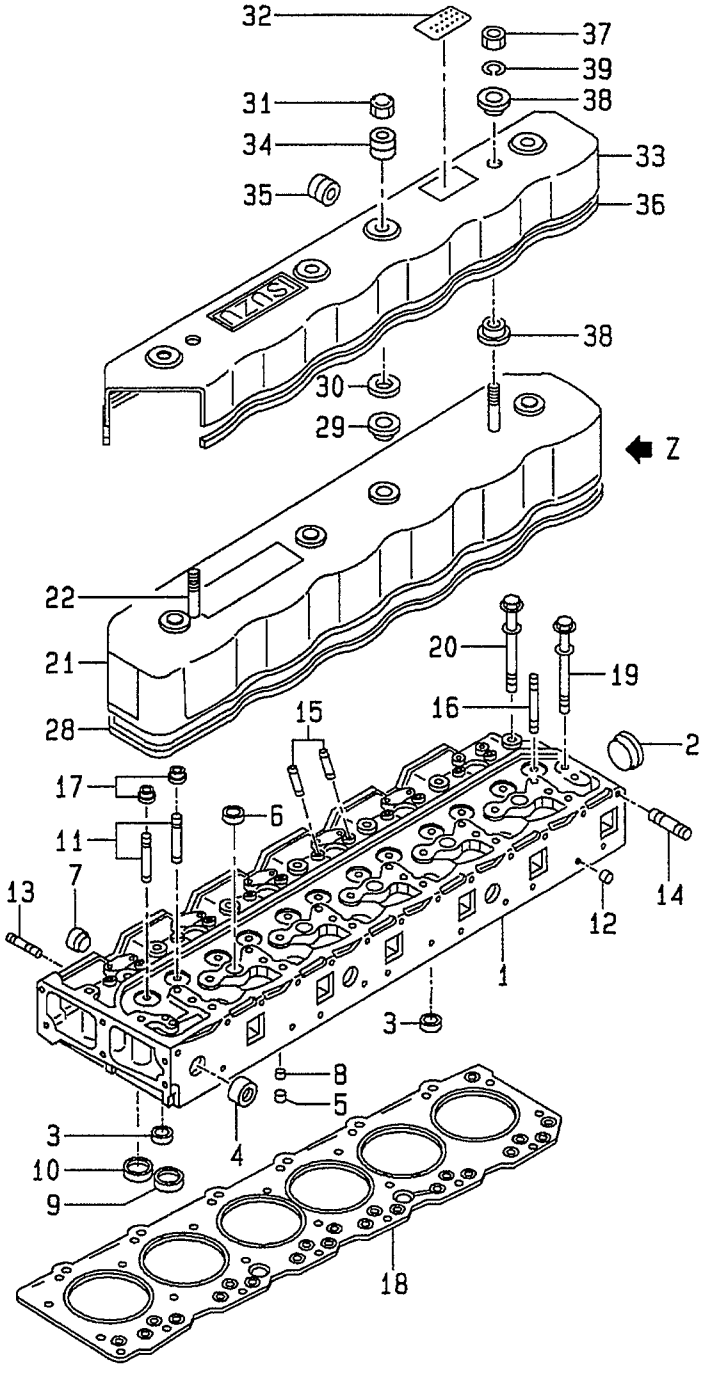


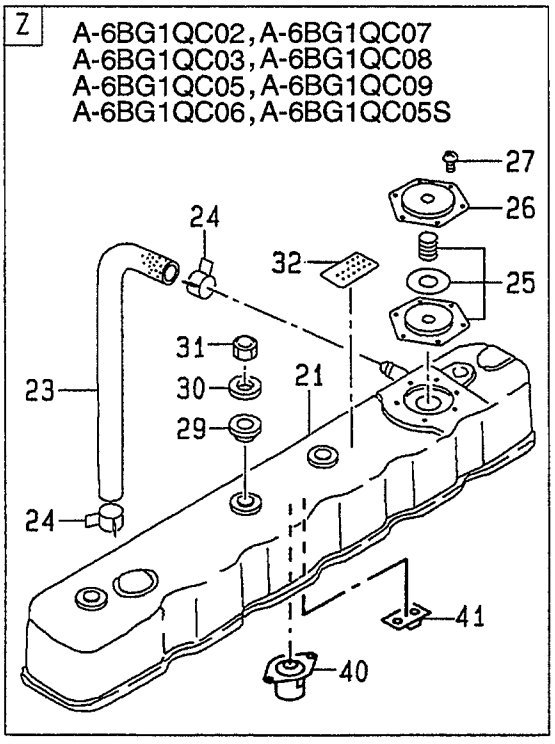


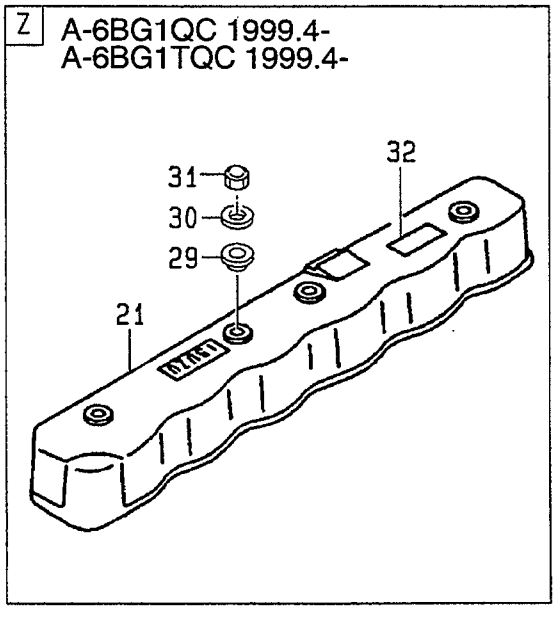

A: A-6BG1QC
B: A-6BG1TQC
C: A-6BG1QC02
D: A-6BG1QC03
E: A-6BG1QC05
F: A-6BG1QC06
G: A-6BG1QC07
H: A-6BG1QC08
J: A-6BG1QC09
K: A-6BG1QC05S

**FIG. 7**

| Item No. 見出番号 | Part No. 部品番号 | Mark 記号 | Description 部品名称 | | Req'd 個数 | Remarks : serial No. 備考：実施号車 |
|---|---|---|---|---|---|---|
| 21 | Z-1-11171-358-1 | | COVER,CYLINDER HEAD | ｶﾊﾞｰ | 1 | A & B<br>1999.4- |
| - | Z-1-11180-350-0 | | COVER,CYLINDER HEAD | ｶﾊﾞｰ | 1 | C,D,E,F,G,H,J,K<br>INC.25-27 |
| 22 | Z-9-0411-0825-0 | | STUD | ｽﾀｯﾄﾞ | 2 | A & B<br>-1999.3 |
| 23 | Z-1-09360-752-0 | | HOSE | ﾎｰｽ | 1 | C,D,E,F,G,H,J,K |
| 24 | Z-1-09707-084-1 | | CLIP | ｸﾘｯﾌﾟ | 2 | C,D,E,F,G,H,J,K |
| 25 | Z-8-94110-111-0 | | DIAPHRAGM | ﾀﾞｲﾔﾌﾗﾑ | 1 | C,D,E,F,G,H,J,K |
| 26 | Z-1-14362-002-0 | | COVER | ｶﾊﾞｰ | 1 | C,D,E,F,G,H,J,K |
| 27 | Z-9-9349-0510-0 | | SCREW | ｽｸﾘｭ | 6 | C,D,E,F,G,H,J,K |
| 28 | Z-1-11173-059-0 | * | PACKING | ﾊﾟｯｷﾝｸﾞ | 1 | A,B |
| - | Z-1-11173-055-0 | * | PACKING | ﾊﾟｯｷﾝｸﾞ | 1 | C,D,E,F,G,H,J,K |
| 29 | Z-9-11179-030-0 | * | PACKING | ﾊﾟｯｷﾝｸﾞ | 4 | |
| 30 | Z-9-11179-105-0 | | WASHER | ﾜｯｼｬ | 4 | |
| 31 | Z-8-94340-192-0 | | NUT | ﾅｯﾄ | 4 | A & B<br>-1999.3 |
| - | Z-9-11175-011-0 | | NUT | ﾅｯﾄ | 4 | A & B<br>1999.4- |
| - | Z-8-94340-192-0 | | NUT | ﾅｯﾄ | 4 | C,D,E,F,G,H,J,K |
| 32 | Z-1-85888-678-0 | | LABEL | ﾗﾍﾞﾙ | 1 | A<br>-1999.10 |
| - | Z-1-85886-953-0 | | LABEL | ﾗﾍﾞﾙ | 1 | A<br>1999.11- |
| - | Z-1-85888-643-0 | | LABEL | ﾗﾍﾞﾙ | 1 | B<br>-1999.10 |
| - | Z-1-85886-952-0 | | LABEL | ﾗﾍﾞﾙ | 1 | B<br>1999.11- |
| - | Z-1-85878-009-0 | | LABEL | ﾗﾍﾞﾙ | 1 | C & D & E & F & G &<br>H & J & K<br>-1999.10 |
| - | Z-1-85886-951-0 | | LABEL | ﾗﾍﾞﾙ | 1 | C & D & E & F & G &<br>H & J & K<br>1999.11- |
| 33 | Z-5-19381-001-3 | | COVER | ｶﾊﾞｰ | 1 | A & B<br>-1999.3 |
| 34 | Z-1-19389-004-0 | | GROMMET | ｸﾞﾛﾒｯﾄ | 4 | A & B<br>-1999.3 |
| 35 | Z-9-0957-5208-0 | | GROMMET | ｸﾞﾛﾒｯﾄ | 1 | A & B<br>-1999.3 |
| 36 | Z-1-19387-007-0 | | SEAL,RUBBER | ｼｰﾙ | 1 | A & B<br>-1999.3 |
| 37 | Z-9-0911-0408-0 | | NUT | ﾅｯﾄ | 2 | A & B<br>-1999.3 |
| 38 | Z-1-09337-027-0 | | RUBBER,MOUNT | ﾗﾊﾞｰ | 4 | A & B<br>-1999.3 |
| 39 | Z-9-0915-0508-0 | | WASHER | ﾜｯｼｬ | 2 | A & B<br>-1999.3 |
| 40 | Z-1-11179-094-0 | | FLOAT | ﾌﾛｰﾄ | 2 | C,D,E,F,G,H,J,K |
| 41 | Z-1-11179-099-0 | | PLATE | ﾌﾟﾚｰﾄ | 1 | C,D,E,F,G,H,J,K |

## FIG. 8 VALVE MECHANISM
ﾊﾞﾙﾌﾞﾒｶﾆｽﾞﾑ

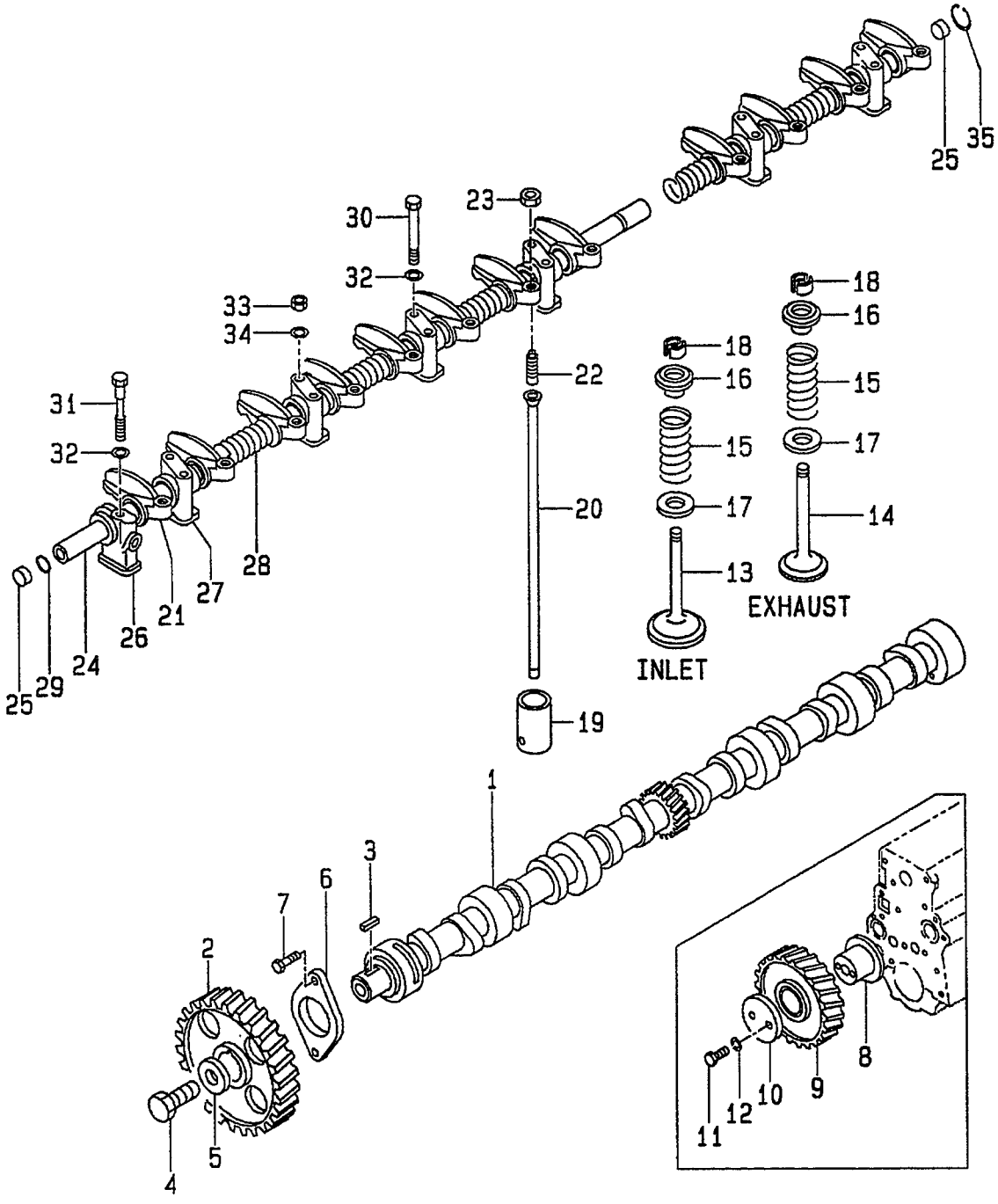

A: A-6BG1QC
B: A-6BG1TQC
C: A-6BG1QC02
D: A-6BG1QC03
E: A-6BG1QC05
F: A-6BG1QC06
G: A-6BG1QC07
H: A-6BG1QC08
J: A-6BG1QC09
K: A-6BG1QC05S

**FIG. 8**

| Item No. 見出番号 | Part No. 部品番号 | Mark 記号 | Description 部品名称 | | Req'd 個数 | Remarks : serial No. 備考：実施号車 |
|---|---|---|---|---|---|---|
| 1 | Z-1-12514-005-0 | | CAMSHAFT,TIMING | ｶﾑｼｬﾌﾄ | 1 | |
| 2 | Z-1-12522-016-2 | | GEAR,CAMSHAFT | ｷﾞﾔｰ | 1 | |
| 3 | Z-9-0803-0713-0 | | KEY | ｷｰ | 1 | |
| 4 | Z-9-9206-1428-0 | | BOLT | ﾎﾞﾙﾄ | 1 | |
| 5 | Z-9-09851-850-3 | | WASHER | ﾜｯｼｬ | 1 | |
| 6 | Z-9-11681-015-0 | | PLATE,THRUST | ﾌﾟﾚｰﾄ | 1 | |
| 7 | Z-0-5004-0825-0 | | BOLT | ﾎﾞﾙﾄ | 2 | |
| 8 | Z-9-12531-030-0 | | SHAFT,IDLE | ｼｬﾌﾄ | 1 | |
| 9 | Z-1-12523-057-3 | | GEAR,IDLE | ｷﾞﾔｰ | 1 | A & B -1996.4 |
| - | Z-8-94133-937-3 | | GEAR,IDLE | ｷﾞﾔｰ | 1 | A & B 1996.5- |
| - | Z-8-94133-937-3 | | GEAR,IDLE | ｷﾞﾔｰ | 1 | C,D,E,F,G,H,J,K |
| 10 | Z-5-12535-001-1 | | COLLAR | ｶﾗｰ | 1 | |
| 11 | Z-0-1081-1055-0 | | BOLT | ﾎﾞﾙﾄ | 2 | |
| 12 | Z-9-0915-0510-0 | | WASHER | ﾜｯｼｬ | 2 | |
| 13 | Z-1-12551-083-0 | | VALVE,INLET | ﾊﾞﾙﾌﾞ | 6 | |
| 14 | Z-1-12552-025-1 | | VALVE,EXHAUST | ﾊﾞﾙﾌﾞ | 6 | -2001.1 |
| - | Z-1-12552-111-0 | | VALVE,EXHAUST | ﾊﾞﾙﾌﾞ | 6 | 2001.2- |
| 15 | Z-1-12561-099-0 | | SPRING,VALVE | ｽﾌﾟﾘﾝｸﾞ | 12 | |
| 16 | Z-8-94114-579-0 | | SEAT,SPRING,UPPER | ｼｰﾄ | 12 | |
| 17 | Z-5-12563-001-0 | | SEAT,SPRING,LOWER | ｼｰﾄ | 12 | |
| 18 | Z-5-12565-006-0 | | COLLAR | ｶﾗｰ | 24 | |
| 19 | Z-5-12571-003-2 | | TAPPET | ﾀﾍﾟｯﾄ | 12 | |
| 20 | Z-1-12575-036-0 | | ROD,PUSH | ﾛｯﾄﾞ | 12 | |
| 21 | Z-1-12611-118-0 | | ARM,ROCKER | ｱｰﾑ | 12 | -2001.1 |
| - | Z-1-12611-249-0 | | ARM,ROCKER | ｱｰﾑ | 12 | 2001.2- |
| 22 | Z-9-12616-042-0 | | SCREW | ｽｸﾘｭ | 12 | |
| 23 | Z-9-0911-1508-0 | | NUT | ﾅｯﾄ | 12 | |
| 24 | Z-1-12621-062-1 | | SHAFT | ｼｬﾌﾄ | 1 | -2001.1 |
| - | Z-1-12621-094-0 | | SHAFT | ｼｬﾌﾄ | 1 | 2001.2- |
| 25 | Z-9-12626-005-0 | | PLUG | ﾌﾟﾗｸﾞ | 2 | |
| 26 | Z-5-12628-012-0 | | BRACKET,ROCKER | ﾌﾞﾗｹｯﾄ | 1 | |
| 27 | Z-9-12628-105-0 | | BRACKET | ﾌﾞﾗｹｯﾄ | 6 | |
| 28 | Z-1-09580-335-0 | | SPRING | ｽﾌﾟﾘﾝｸﾞ | 5 | |
| 29 | Z-5-09623-060-0 | | O RING | Oﾘﾝｸﾞ | 1 | |
| 30 | Z-1-09000-567-0 | | BOLT | ﾎﾞﾙﾄ | 8 | |
| 31 | Z-9-09602-148-0 | | BOLT | ﾎﾞﾙﾄ | 1 | |
| 32 | Z-9-09851-430-0 | | WASHER | ﾜｯｼｬ | 9 | |
| 33 | Z-1-09400-116-0 | | NUT | ﾅｯﾄ | 4 | |
| 34 | Z-9-09851-430-0 | | WASHER | ﾜｯｼｬ | 4 | |
| 35 | Z-9-0918-0019-0 | | RING,SNAP | ﾘﾝｸﾞ | 1 | |

## FIG. 9 AIR INTAKE & EXHAUST SYSTEM (A)
エアーインテーク&エキゾーストシステム

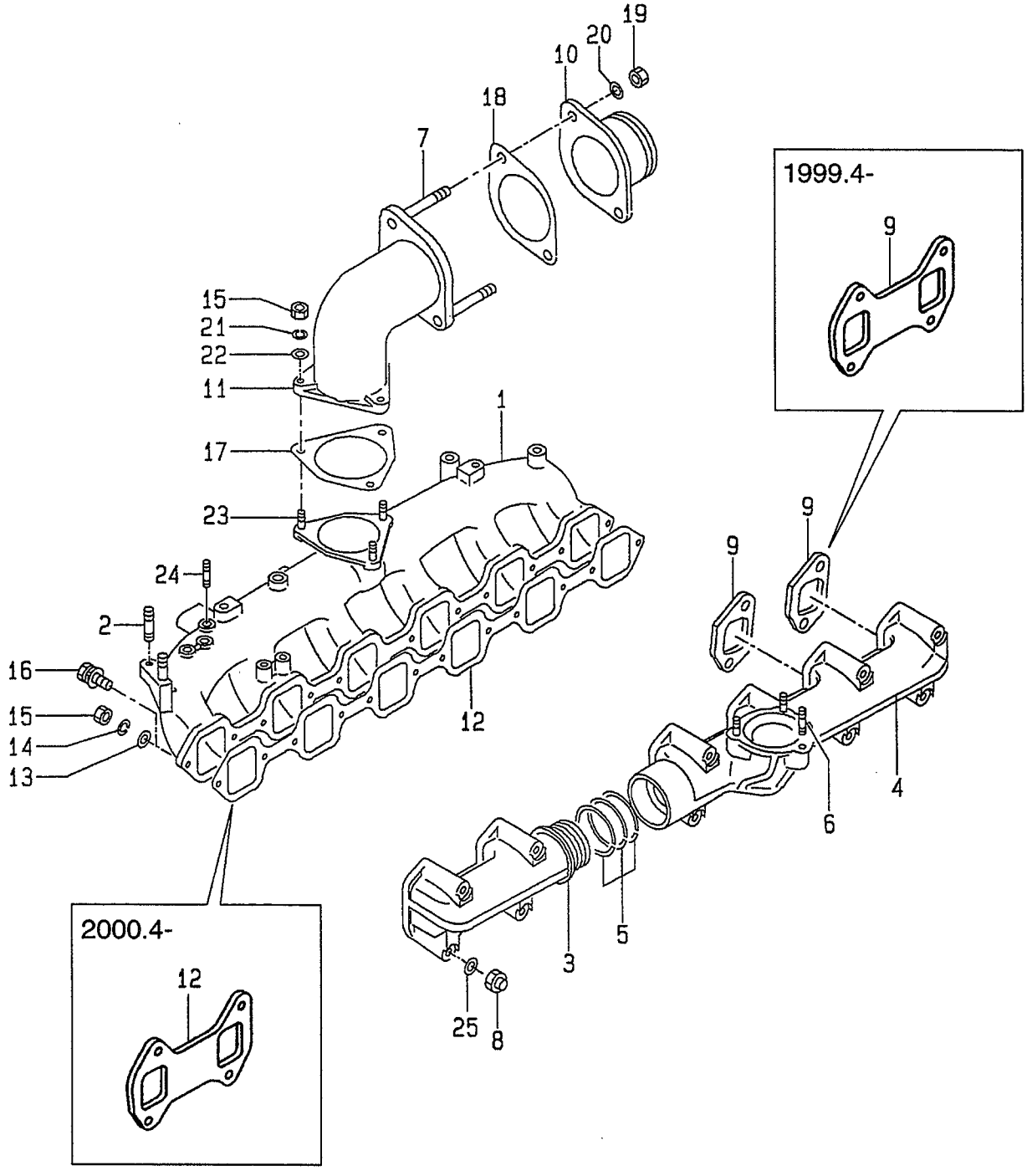

A: A-6BG1QC
B: A-6BG1TQC
C: A-6BG1QC02
D: A-6BG1QC03
E: A-6BG1QC05
F: A-6BG1QC06
G: A-6BG1QC07
H: A-6BG1QC08
J: A-6BG1QC09
K: A-6BG1QC05S

**FIG. 9**

| Item No. 見出番号 | Part No. 部品番号 | Mark 記号 | Description 部品名称 | | Req'd 個数 | Remarks : serial No. 備考：実施号車 |
|---|---|---|---|---|---|---|
| K1 | Z-1-87811-031-5 | | ENGINE OVERHAUL REPAIR KIT | ｴﾝｼﾞﾝｵｰﾊﾞﾎｰﾙ ﾘﾍﾟｱｰｷｯﾄ | 1 | A INC.9,12,17 & etc. |
| K2 | Z-1-87811-242-1 | | ENGINE TOP OVERHAUL REPAIR KIT | ｴﾝｼﾞﾝﾄｯﾌﾟｵｰﾊﾞﾎｰﾙ ﾘﾍﾟｱｰｷｯﾄ | 1 | A INC.9,12 & etc. |
| 1 | Z-1-14112-209-3 | | MANIFOLD,INLET | ﾏﾆﾎｰﾙﾄﾞ | 1 | A -1999.3 |
| - | Z-1-14112-180-3 | | MANIFOLD,INLET | ﾏﾆﾎｰﾙﾄﾞ | 1 | A 1999.4- |
| 2 | Z-9-0441-1028-0 | | STUD | ｽﾀｯﾄﾞ | 2 | A |
| 3 | Z-9-14141-276-1 | | MANIFOLD,EXHAUST | ﾏﾆﾎｰﾙﾄﾞ | 1 | A |
| 4 | Z-1-14141-690-0 | | MANIFOLD,EXHAUST | ﾏﾆﾎｰﾙﾄﾞ | 1 | A |
| 5 | Z-9-14149-653-0 | | RING,SEAL | ﾘﾝｸﾞ | 3 | A |
| 6 | Z-9-0441-1030-0 | | STUD | ｽﾀｯﾄﾞ | 3 | A |
| 7 | Z-9-0441-1025-0 | | STUD | ｽﾀｯﾄﾞ | 2 | A |
| 8 | Z-9-09844-565-0 | | NUT | ﾅｯﾄ | 12 | A -1999.3 |
| - | Z-8-94170-486-0 | | NUT | ﾅｯﾄ | 12 | A 1999.4- |
| 9 | Z-1-14145-114-0 | * | GASKET | ｶﾞｽｹｯﾄ | 6 | A -1999.3 |
| - | Z-8-94404-610-0 | * | GASKET | ｶﾞｽｹｯﾄ | 3 | A 1999.4- |
| 10 | Z-1-14112-315-0 | | PIPE,INLET | ﾊﾟｲﾌﾟ | 1 | A |
| 11 | Z-5-14111-110-1 | | PIPE,INLET | ﾊﾟｲﾌﾟ | 1 | A |
| 12 | Z-1-14115-061-0 | * | PACKING | ﾊﾟｯｷﾝｸﾞ | 1 | A -2000.3 |
| - | Z-8-97235-788-1 | * | PACKING | ﾊﾟｯｷﾝｸﾞ | 3 | A 2000.4- |
| 13 | Z-9-0916-0508-0 | | WASHER | ﾜｯｼｬ | 3 | A -2000.3 |
| - | Z-9-0915-0508-0 | | WASHER | ﾜｯｼｬ | 6 | A 2000.4- |
| 14 | Z-9-0915-0508-0 | | WASHER | ﾜｯｼｬ | 3 | A -2000.3 |
| - | Z-9-0915-0508-0 | | WASHER | ﾜｯｼｬ | 6 | A 2000.4- |
| 15 | Z-9-0911-0408-0 | | NUT | ﾅｯﾄ | 6 | A -2000.3 |
| - | Z-9-0911-0408-0 | | NUT | ﾅｯﾄ | 9 | A 2000.4- |
| 16 | Z-0-5014-0828-0 | | BOLT | ﾎﾞﾙﾄ | 9 | A -2000.3 |
| - | Z-0-5014-0828-0 | | BOLT | ﾎﾞﾙﾄ | 6 | A 2000.4- |
| 17 | Z-1-14115-059-0 | * | PACKING | ﾊﾟｯｷﾝｸﾞ | 1 | A |
| 18 | Z-1-09637-061-0 | * | PACKING | ﾊﾟｯｷﾝｸﾞ | 1 | A |
| 19 | Z-9-0911-0410-0 | | NUT | ﾅｯﾄ | 2 | A |
| 20 | Z-9-0915-0510-0 | | WASHER | ﾜｯｼｬ | 2 | A |
| 21 | Z-9-0915-0508-0 | | WASHER | ﾜｯｼｬ | 3 | A |
| 22 | Z-9-0916-0508-0 | | WASHER | ﾜｯｼｬ | 3 | A |

## FIG. 9 AIR INTAKE & EXHAUST SYSTEM (A)
エアーインテーク&エキゾーストシステム

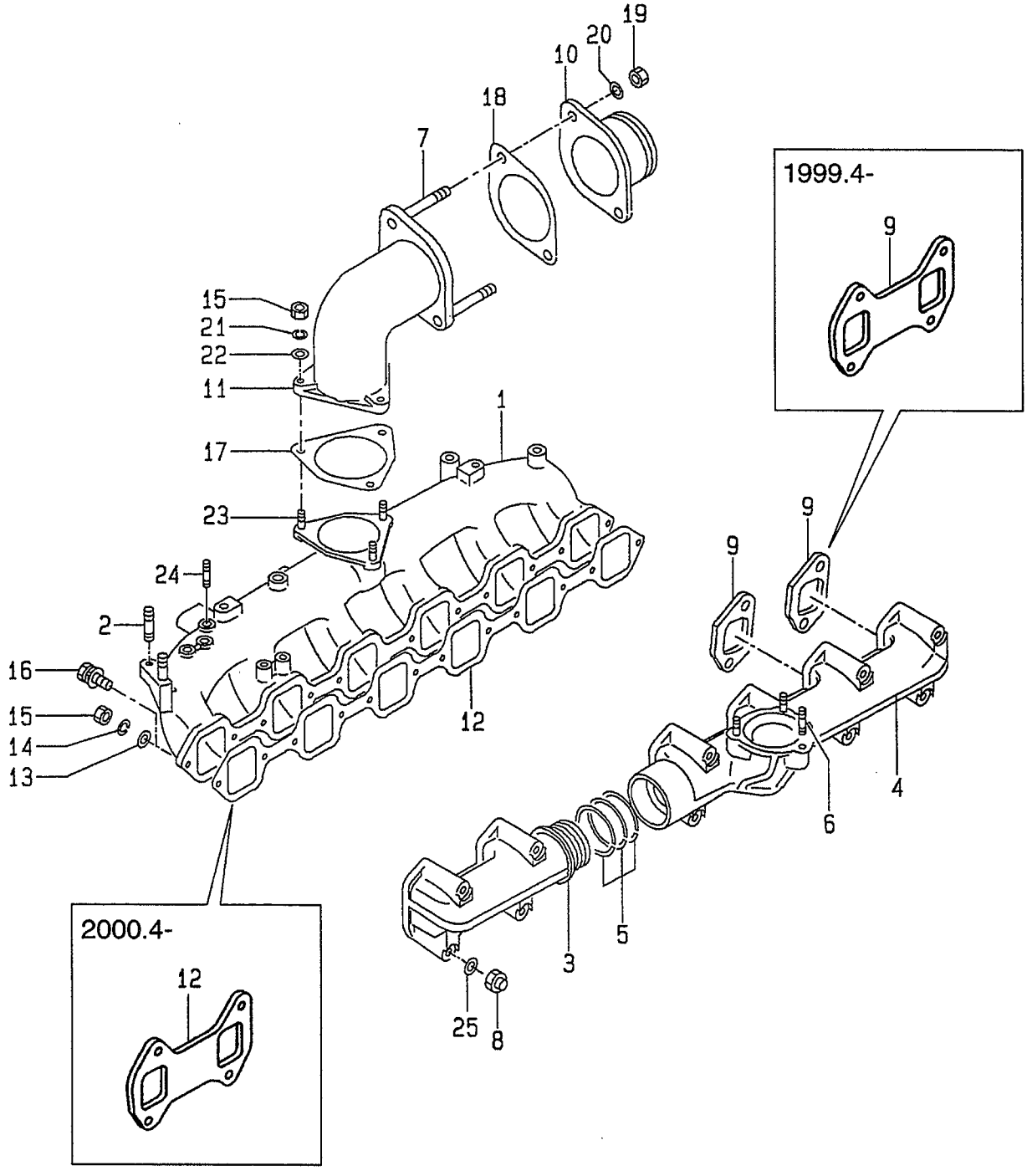

A: A-6BG1QC
B: A-6BG1TQC
C: A-6BG1QC02
D: A-6BG1QC03
E: A-6BG1QC05
F: A-6BG1QC06
G: A-6BG1QC07
H: A-6BG1QC08
J: A-6BG1QC09
K: A-6BG1QC05S

**FIG. 9**

| Item No. 見出番号 | Part No. 部品番号 | Mark 記号 | Description 部品名称 | | Req'd 個数 | Remarks : serial No. 備考：実施号車 |
|---|---|---|---|---|---|---|
| 23 | Z-5-09300-029-0 | | STUD | ｽﾀｯﾄﾞ | 1 | A<br>1999.9- |
| 24 | Z-5-09300-029-0 | | STUD | ｽﾀｯﾄﾞ | 1 | A<br>-1999.3 |
| - | Z-5-09300-029-0 | | STUD | ｽﾀｯﾄﾞ | 2 | A<br>1999.4- |
| 25 | Z-9-09851-649-0 | | WASHER | ﾜｯｼｬ | 4 | A<br>1999.9- |

# FIG. 10 AIR INTAKE & EXHAUST SYSTEM (B)
エアーインテーク&エキゾ゛ーストシステム

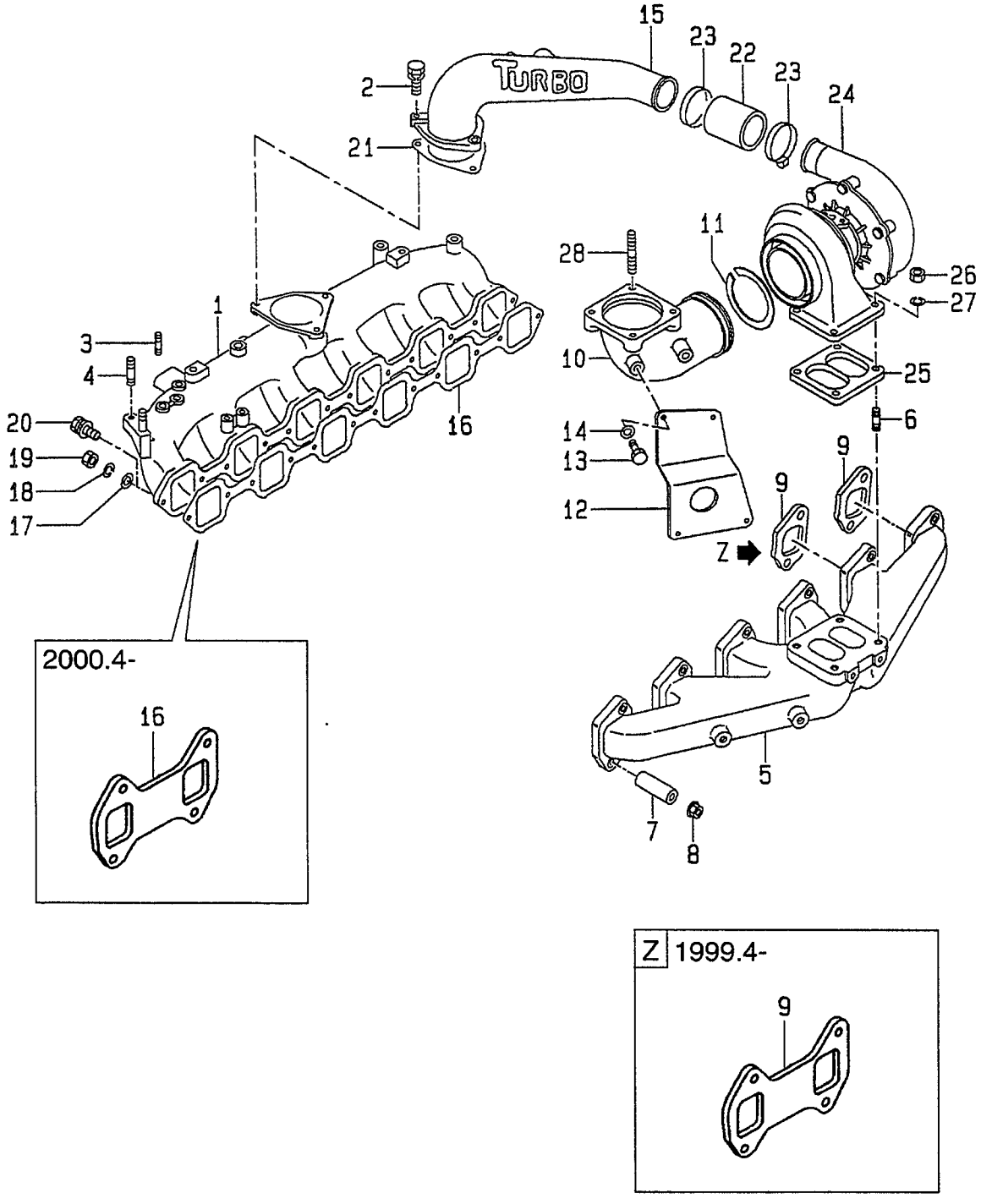

A: A-6BG1QC
B: A-6BG1TQC
C: A-6BG1QC02
D: A-6BG1QC03
E: A-6BG1QC05
F: A-6BG1QC06
G: A-6BG1QC07
H: A-6BG1QC08
J: A-6BG1QC09
K: A-6BG1QC05S

**FIG. 10**

| Item No. 見出番号 | Part No. 部品番号 | Mark 記号 | Description 部品名称 | | Req'd 個数 | Remarks : serial No. 備考：実施号車 |
|---|---|---|---|---|---|---|
| K1 | Z-1-87811-223-3 | | ENGINE OVERHAUL REPAIR KIT | ｴﾝｼﾞﾝｵｰﾊﾞﾎｰﾙ ﾘﾍﾟｱｰｷｯﾄ | 1 | B INC.9,16,21,25 & etc. |
| K2 | Z-1-87811-242-1 | | ENGINE TOP OVERHAUL REPAIR KIT | ｴﾝｼﾞﾝﾄｯﾌﾟｵｰﾊﾞﾎｰﾙ ﾘﾍﾟｱｰｷｯﾄ | 1 | B INC.9,16 & etc. |
| 1 | Z-1-14112-209-3 | | MANIFOLD,INLET | ﾏﾆﾎｰﾙﾄﾞ | 1 | B -1999.3 |
| - | Z-1-14112-180-3 | | MANIFOLD,INLET | ﾏﾆﾎｰﾙﾄﾞ | 1 | B 1999.4- |
| 2 | Z-0-5014-0830-0 | | BOLT | ﾎﾞﾙﾄ | 3 | B -1997.7 |
| - | Z-0-2868-0830-0 | | BOLT | ﾎﾞﾙﾄ | 3 | B 1997.8- |
| 3 | Z-5-09300-029-0 | | STUD | ｽﾀｯﾄﾞ | 4 | B |
| 4 | Z-9-0441-1028-0 | | STUD | ｽﾀｯﾄﾞ | 2 | B |
| 5 | Z-1-14141-692-1 | | MANIFOLD,EXHAUST | ﾏﾆﾎｰﾙﾄﾞ | 1 | B -1996.8 |
| - | Z-1-14141-791-2 | | MANIFOLD,EXHAUST | ﾏﾆﾎｰﾙﾄﾞ | 1 | B 1996.9- |
| 6 | Z-9-0473-1025-0 | | STUD | ｽﾀｯﾄﾞ | 4 | B |
| 7 | Z-1-14149-170-1 | | TUBE,DISTANCE | ﾁｭｰﾌﾞ | 12 | B |
| 8 | Z-1-09440-040-1 | | NUT | ﾅｯﾄ | 12 | B |
| 9 | Z-1-14145-114-0 | * | GASKET | ｶﾞｽｹｯﾄ | 6 | B -1999.3 |
| - | Z-8-94404-610-0 | * | GASKET | ｶﾞｽｹｯﾄ | 3 | B 1999.4- |
| 10 | Z-1-14144-605-0 | | ADAPTER | ｱﾀﾞﾌﾟﾀ | 1 | B |
| 11 | Z-1-14149-084-2 | | SEAL,RING | ｼｰﾙ | 2 | B |
| 12 | Z-1-14149-212-0 | | BRACKET | ﾌﾞﾗｹｯﾄ | 1 | B |
| 13 | Z-0-2080-1022-0 | | BOLT | ﾎﾞﾙﾄ | 2 | B -1997.7 |
| - | Z-0-2808-1020-0 | | BOLT | ﾎﾞﾙﾄ | 2 | B 1997.8- |
| - | Z-0-1080-6070-0 | | BOLT | ﾎﾞﾙﾄ | 2 | B |
| 14 | Z-9-0916-4010-0 | | WASHER | ﾜｯｼｬ | 4 | B |
| 15 | Z-1-14112-622-1 | | PIPE,INLET | ﾊﾟｲﾌﾟ | 1 | B |
| 16 | Z-1-14115-061-0 | * | PACKING | ﾊﾟｯｷﾝｸﾞ | 1 | B -2000.3 |
| - | Z-8-97235-788-1 | * | PACKING | ﾊﾟｯｷﾝｸﾞ | 3 | B 2000.4- |
| 17 | Z-9-0916-0508-0 | | WASHER | ﾜｯｼｬ | 3 | B -2000.3 |
| - | Z-9-0916-0508-0 | | WASHER | ﾜｯｼｬ | 6 | B 2000.4- |
| 18 | Z-9-0915-0508-0 | | WASHER | ﾜｯｼｬ | 3 | B -2000.3 |
| - | Z-9-0915-0508-0 | | WASHER | ﾜｯｼｬ | 6 | B 2000.4- |
| 19 | Z-9-0911-0408-0 | | NUT | ﾅｯﾄ | 3 | B -2000.3 |

# FIG. 10 AIR INTAKE & EXHAUST SYSTEM (B)
エアーインテーク&エキゾ゛ーストシステム

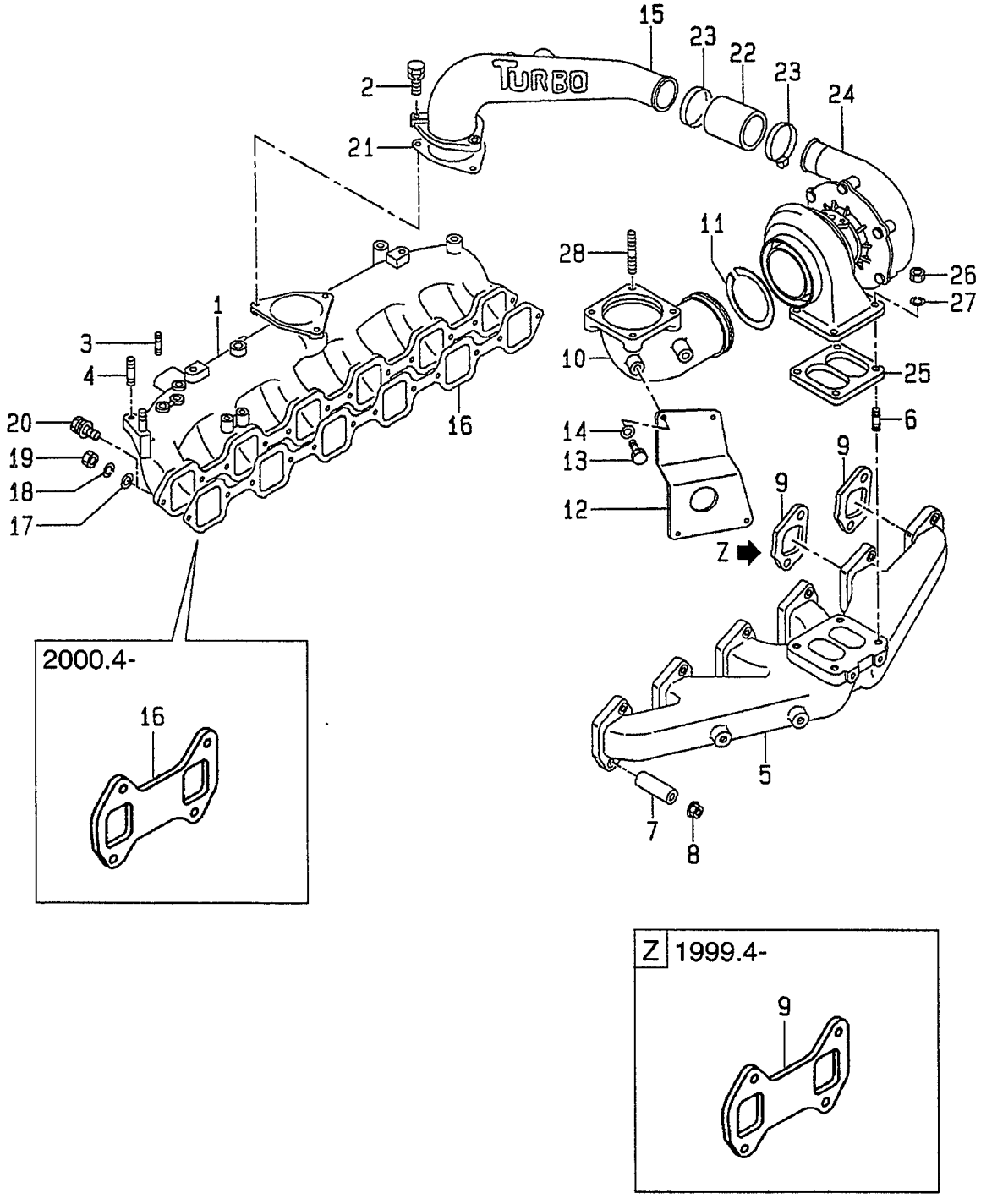

A: A-6BG1QC
B: A-6BG1TQC
C: A-6BG1QC02
D: A-6BG1QC03
E: A-6BG1QC05
F: A-6BG1QC06
G: A-6BG1QC07
H: A-6BG1QC08
J: A-6BG1QC09
K: A-6BG1QC05S

**FIG. 10**

| Item No. 見出番号 | Part No. 部品番号 | Mark 記号 | Description 部品名称 | | Req'd 個数 | Remarks : serial No. 備考：実施号車 |
|---|---|---|---|---|---|---|
| 19 | Z-9-0911-0408-0 | | NUT | ﾅｯﾄ | 6 | B<br>2000.4- |
| 20 | Z-0-5014-0828-0 | | BOLT | ﾎﾞﾙﾄ | 9 | B<br>-2000.3 |
| - | Z-0-5014-0828-0 | | BOLT | ﾎﾞﾙﾄ | 6 | B<br>2000.4- |
| 21 | Z-1-14115-059-0 | * | PACKING | ﾊﾟｯｷﾝｸﾞ | 1 | B |
| 22 | Z-1-09360-782-0 | | HOSE | ﾎｰｽ | 1 | B |
| 23 | Z-8-94316-991-0 | | CLIP | ｸﾘｯﾌﾟ | 2 | B |
| 24 | Z-1-14400-333-2 | | TURBO CHARGER | ﾀｰﾎﾞﾁｬｰｼﾞｬ | 1 | B<br>SEE FIG.12 |
| 25 | Z-1-14145-140-0 | * | GASKET | ｶﾞｽｹｯﾄ | 1 | B |
| 26 | Z-9-09842-007-0 | | NUT | ﾅｯﾄ | 3 | B |
| - | Z-1-09420-005-0 | | NUT | ﾅｯﾄ | 1 | B |
| 27 | Z-1-09503-033-1 | | WASHER | ﾜｯｼｬ | 4 | B |
| 28 | Z-9-0441-1030-0 | | STUD | ｽﾀｯﾄﾞ | 4 | B |

## FIG. 11 AIR INTAKE & EXHAUST SYSTEM (C,D,E,F,G,H,J,K)

エアーインテーク&エキゾーストシステム

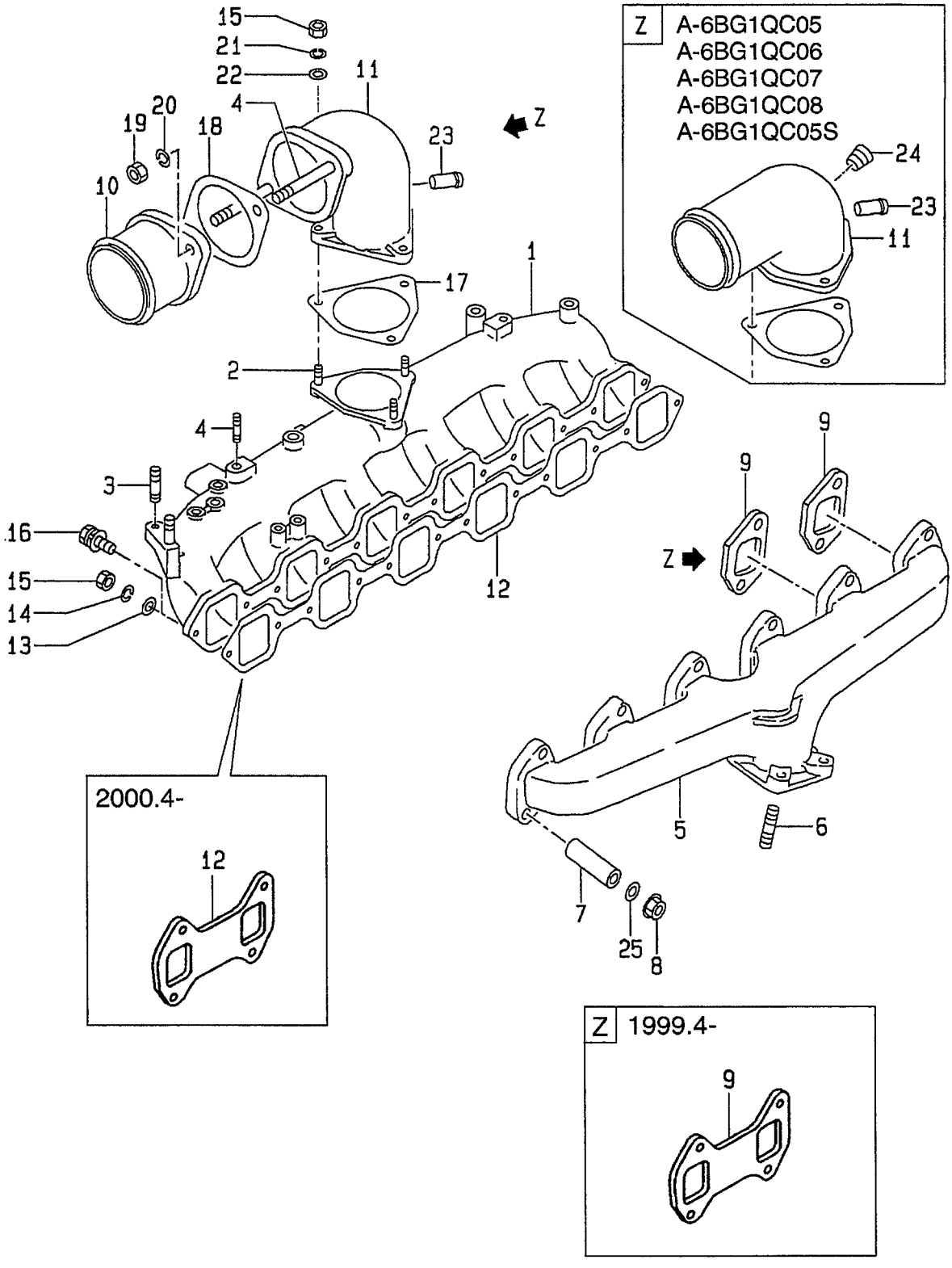

A: A-6BG1QC
B: A-6BG1TQC
C: A-6BG1QC02
D: A-6BG1QC03
E: A-6BG1QC05
F: A-6BG1QC06
G: A-6BG1QC07
H: A-6BG1QC08
J: A-6BG1QC09
K: A-6BG1QC05S

**FIG. 11**

| Item No. 見出番号 | Part No. 部品番号 | Mark 記号 | Description 部品名称 | | Req'd 個数 | Remarks : serial No. 備考：実施号車 |
|---|---|---|---|---|---|---|
| K1 | Z-1-87811-628-3 | | ENGINE OVERHAUL REPAIR KIT | ｴﾝｼﾞﾝｵｰﾊﾞﾎｰﾙ ﾘﾍﾟｱｰｷｯﾄ | 1 | C,D,E,F,H,J,K INC.9,12,17 & etc. |
| K2 | Z-1-87811-887-2 | | ENGINE OVERHAUL REPAIR KIT | ｴﾝｼﾞﾝｵｰﾊﾞﾎｰﾙ ﾘﾍﾟｱｰｷｯﾄ | 1 | G INC.9,12,17 & etc. |
| K3 | Z-1-87810-945-2 | | ENGINE TOP OVERHAUL REPAIR KIT | ｴﾝｼﾞﾝﾄｯﾌﾟｵｰﾊﾞﾎｰﾙ ﾘﾍﾟｱｰｷｯﾄ | 1 | C,D,E,F,G,H,J,K INC.9,12 & etc. |
| 1 | Z-5-14111-243-4 | | MANIFOLD,INLET | ﾏﾆﾎｰﾙﾄﾞ | 1 | C,D,E,F,G,H,J,K |
| 2 | Z-9-0401-0828-0 | | STUD | ｽﾀｯﾄﾞ | 3 | C,D,E,F,G,H,J,K |
| 3 | Z-9-0441-1028-0 | | STUD | ｽﾀｯﾄﾞ | 2 | C,D,E,F,G,H,J,K |
| 4 | Z-9-0441-1025-0 | | STUD | ｽﾀｯﾄﾞ | 2 | C,D,J |
| 5 | Z-1-14141-901-0 | | MANIFOLD,EXHAUST | ﾏﾆﾎｰﾙﾄﾞ | 1 | C,D,E,F,G,H,J,K |
| 6 | Z-9-0441-1030-0 | | STUD | ｽﾀｯﾄﾞ | 4 | C,D,E,F,G,H,J,K |
| 7 | Z-1-14149-170-1 | | TUBE,DISTANCE | ﾁｭｰﾌﾞ | 12 | C,D,E,F,G,H,J,K |
| 8 | Z-1-09440-040-1 | | NUT | ﾅｯﾄ | 12 | C,D,E,F,G,H,J,K |
| 9 | Z-1-14145-114-0 | * | GASKET | ｶﾞｽｹｯﾄ | 6 | C & D & E & F & G & H & J & K -1999.3 |
| - | Z-8-94404-610-0 | * | GASKET | ｶﾞｽｹｯﾄ | 3 | C & D & E & F & G & H & J & K 1999.4- |
| 10 | Z-1-14112-315-0 | | PIPE,INLET | ﾊﾟｲﾌﾟ | 1 | C,D,J |
| 11 | Z-1-14112-515-0 | | PIPE,INLET | ﾊﾟｲﾌﾟ | 1 | C,D,J INC.4,23 |
| - | Z-1-14110-507-1 | | PIPE,INLET | ﾊﾟｲﾌﾟ | 1 | E,F,G,H,K INC.23,24 |
| 12 | Z-1-14115-061-0 | * | PACKING | ﾊﾟｯｷﾝｸﾞ | 1 | C & D & E & F & G & H & J & K -2000.3 |
| - | Z-8-97235-788-1 | * | PACKING | ﾊﾟｯｷﾝｸﾞ | 3 | C & D & E & F & G & H & J & K 2000.4- |
| 13 | Z-9-0916-0508-0 | | WASHER | ﾜｯｼｬ | 3 | C & D & E & F & G & H & J & K -2000.3 |
| - | Z-9-0915-0508-0 | | WASHER | ﾜｯｼｬ | 6 | C & D & E & F & G & H & J & K 2000.4- |
| 14 | Z-9-0915-0508-0 | | WASHER | ﾜｯｼｬ | 3 | C & D & E & F & G & H & J & K -2000.3 |
| - | Z-9-0915-0508-0 | | WASHER | ﾜｯｼｬ | 6 | C & D & E & F & G & H & J & K 2000.4- |
| 15 | Z-9-0911-0408-0 | | NUT | ﾅｯﾄ | 6 | C & D & E & F & G & H & J & K -2000.3 |
| - | Z-9-0911-0408-0 | | NUT | ﾅｯﾄ | 9 | C & D & E & F & G & H & J & K 2000.4- |

## FIG. 11 AIR INTAKE & EXHAUST SYSTEM (C,D,E,F,G,H,J,K)

エアーインテーク&エキゾーストシステム

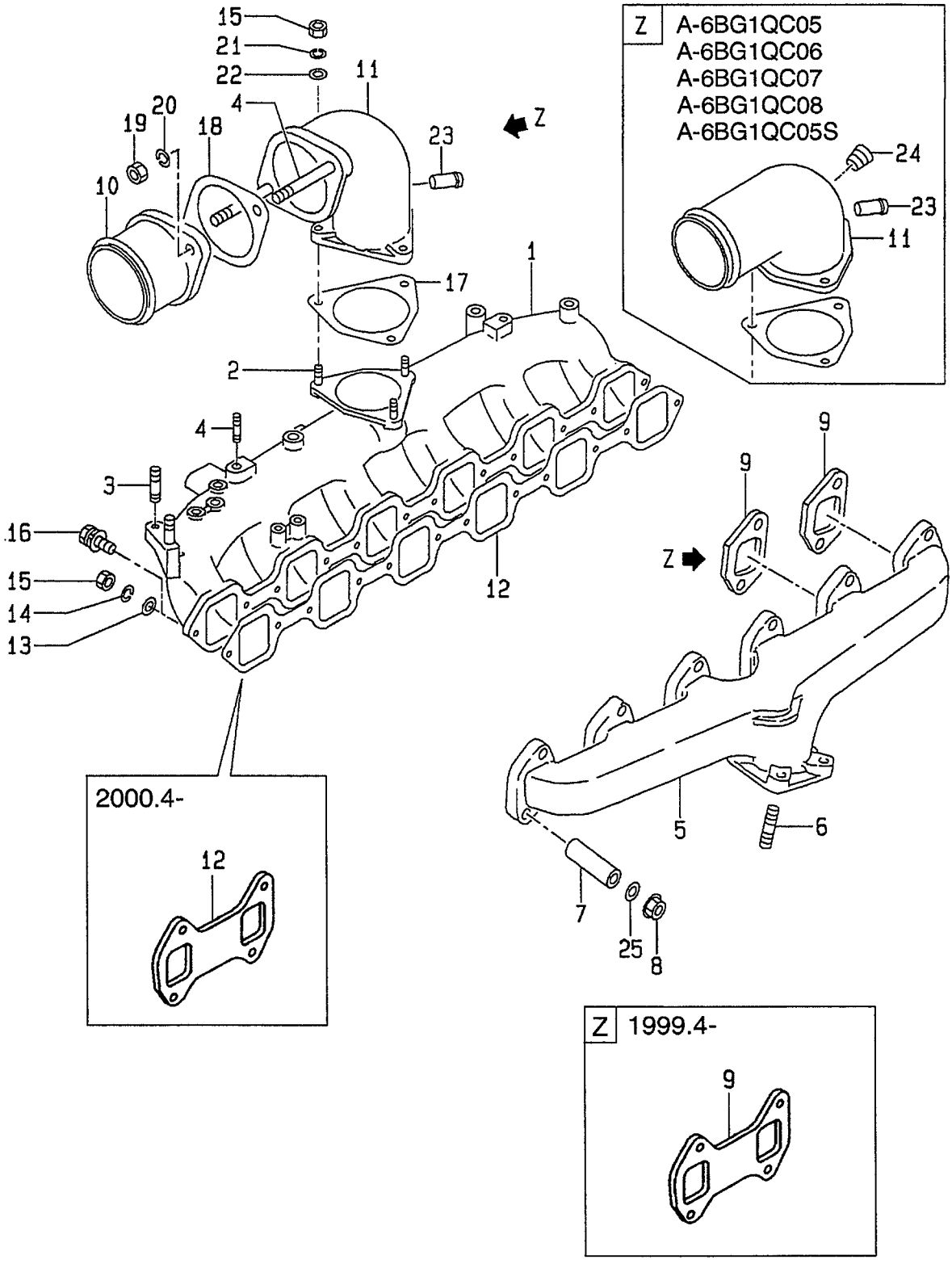

A: A-6BG1QC
B: A-6BG1TQC
C: A-6BG1QC02
D: A-6BG1QC03
E: A-6BG1QC05
F: A-6BG1QC06
G: A-6BG1QC07
H: A-6BG1QC08
J: A-6BG1QC09
K: A-6BG1QC05S

**FIG. 11**

| Item No. 見出番号 | Part No. 部品番号 | Mark 記号 | Description 部品名称 | | Req'd 個数 | Remarks : serial No. 備考：実施号車 |
|---|---|---|---|---|---|---|
| 16 | Z-0-5014-0828-0 | | BOLT | ﾎﾞﾙﾄ | 9 | C & D & E & F & G & H & J & K -2000.3 |
| - | Z-0-5014-0828-0 | | BOLT | ﾎﾞﾙﾄ | 6 | C & D & E & F & G & H & J & K 2000.4- |
| 17 | Z-1-14115-059-0 | * | PACKING | ﾊﾟｯｷﾝｸﾞ | 1 | C,D,E,F,G,H,J,K |
| 18 | Z-1-09637-061-0 | | PACKING | ﾊﾟｯｷﾝｸﾞ | 1 | C,D,J |
| 19 | Z-9-0911-0410-0 | | NUT | ﾅｯﾄ | 2 | C,D,J |
| 20 | Z-9-0915-0510-0 | | WASHER | ﾜｯｼｬ | 2 | C,D,J |
| 21 | Z-9-0915-0508-0 | | WASHER | ﾜｯｼｬ | 3 | C,D,E,F,G,H,J,K |
| 22 | Z-8-09160-508-0 | | WASHER | ﾜｯｼｬ | 3 | C,D,E,F,G,H,J,K |
| 23 | Z-8-94164-027-0 | | PIPE | ﾊﾟｲﾌﾟ | 1 | C,D,E,F,G,H,J,K |
| 24 | Z-5-09605-008-0 | | PLUG | ﾌﾟﾗｸﾞ | 1 | E,F,G,H,K |
| 25 | Z-9-09851-649-0 | | WASHER | ﾜｯｼｬ | 2 | C & D & E & F & G & H & J & K 1999.4- |

## FIG. 12 TURBO CHARGER (B)
ﾀｰﾎﾞﾁｬｰｼﾞｬ

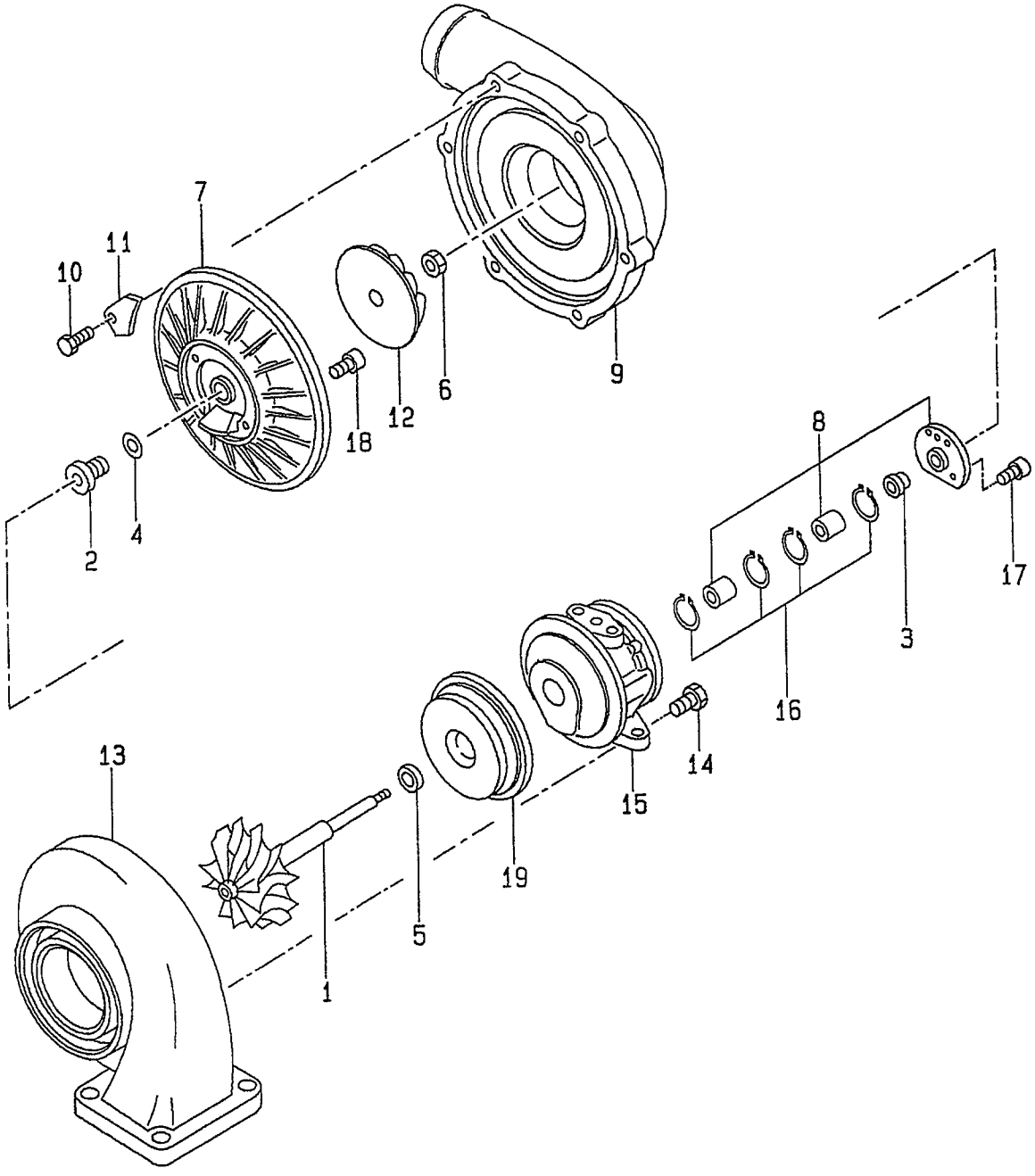

A: A-6BG1QC
B: A-6BG1TQC
C: A-6BG1QC02
D: A-6BG1QC03
E: A-6BG1QC05
F: A-6BG1QC06
G: A-6BG1QC07
H: A-6BG1QC08
J: A-6BG1QC09
K: A-6BG1QC05S

**FIG. 12**

| Item No. 見出番号 | Part No. 部品番号 | Mark 記号 | Description 部品名称 | | Req'd 個数 | Remarks : serial No. 備考：実施号車 |
|---|---|---|---|---|---|---|
| A | Z-1-14400-333-2 | | TURBO CHARGER ASSY | ﾀｰﾎﾞﾁｬｰｼﾞｬｱｯｾﾝ | 1 | B |
| | | | | | | INC.1-19 |
| K | Z-1-14453-083-0 | | REPAIR KIT | ﾘﾍﾟｱｷｯﾄ | 1 | B |
| | | | | | | INC.4,5,8,16-18 |
| 1 | Z-1-14450-053-0 | | SHAFT,TURBINE | ｼｬﾌﾄ | 1 | B |
| 2 | Z-1-14455-041-0 | | THROWER,OIL | ｽﾛﾜ | 1 | B |
| 3 | Z-1-14453-084-0 | | BUSHING | ﾌﾞｯｼﾝｸﾞ | 1 | B |
| 4 | Z-1-14453-085-0 | * | RING,SEAL | ﾘﾝｸﾞ | 1 | B |
| 5 | Z-1-14453-086-0 | * | RING,SEAL | ﾘﾝｸﾞ | 1 | B |
| 6 | Z-1-09400-041-0 | | NUT,LOCK | ﾅｯﾄ | 1 | B |
| 7 | Z-1-14425-029-0 | | PLATE,SEAL | ﾌﾟﾚｰﾄ | 1 | B |
| 8 | NO PART NO. | * | BEARING,SET | ﾍﾞｱﾘﾝｸﾞ | 1 | B |
| 9 | Z-1-14414-093-0 | | HOUSING,BLOWER | ﾊｳｼﾞﾝｸﾞ | 1 | B |
| 10 | Z-1-14379-088-0 | | BOLT | ﾎﾞﾙﾄ | 6 | B |
| 11 | Z-1-14421-020-0 | | PLATE | ﾌﾟﾚｰﾄ | 6 | B |
| 12 | Z-1-14451-057-0 | | IMPELLER | ｲﾝﾍﾟﾗ | 1 | B |
| 13 | Z-1-14414-095-0 | | HOUSING,TURBINE | ﾊｳｼﾞﾝｸﾞ | 1 | B |
| 14 | Z-1-09100-034-0 | | BOLT | ﾎﾞﾙﾄ | 4 | B |
| 15 | Z-1-14414-094-0 | | HOUSING,BEARING | ﾊｳｼﾞﾝｸﾞ | 1 | B |
| 16 | Z-1-14455-042-0 | * | RING,RETAINING | ﾘﾝｸﾞ | 3 | B |
| 17 | Z-1-09100-033-0 | * | SCREW | ｽｸﾘｭ | 3 | B |
| 18 | Z-1-09100-032-0 | * | SCREW | ｽｸﾘｭ | 4 | B |
| 19 | Z-1-14421-024-0 | | PROTECTOR,HEAT | ﾌﾟﾛﾃｸﾀ | 1 | B |

## FIG. 13 MUFFLER (A,B)
マフラ

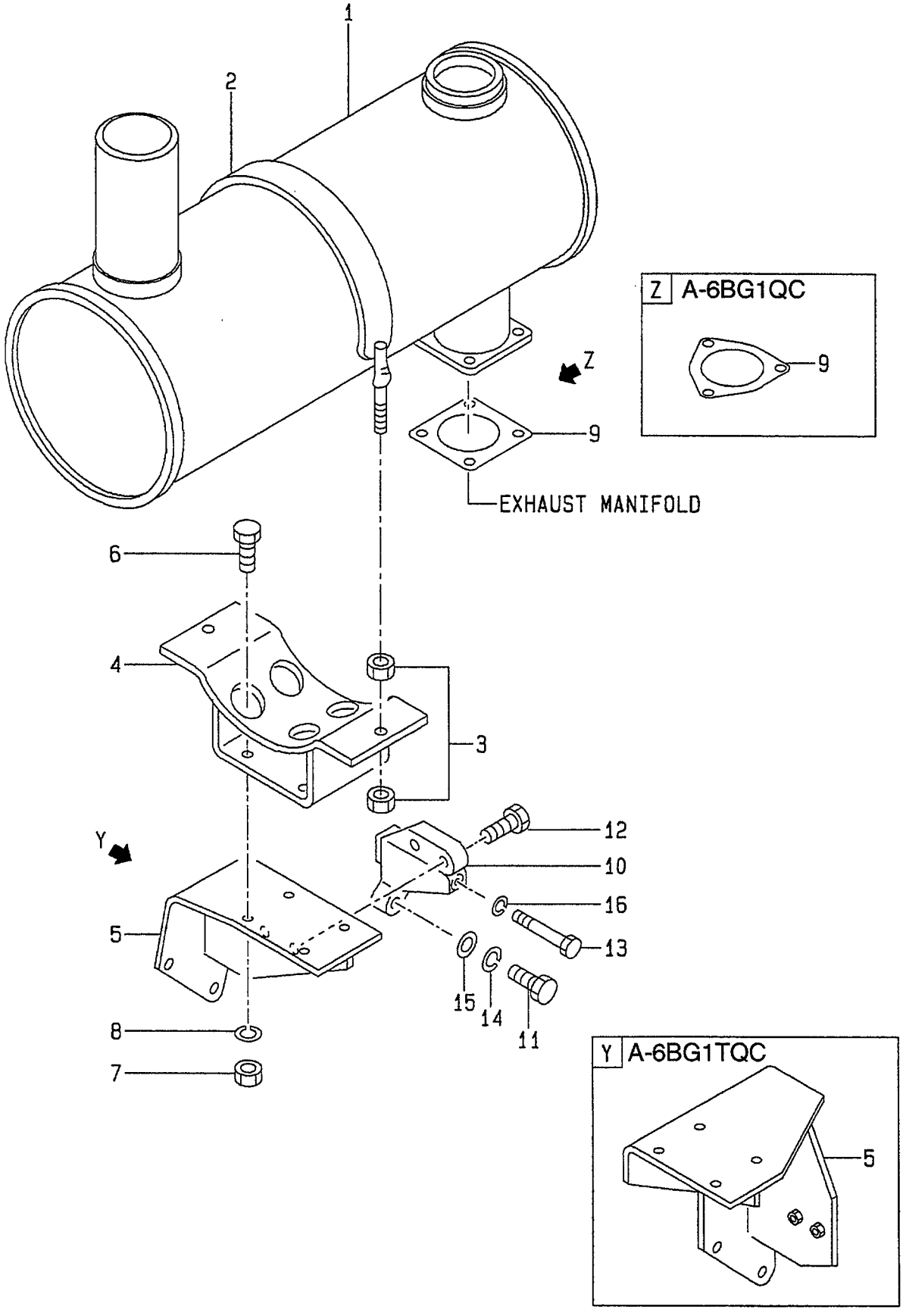

A: A-6BG1QC
B: A-6BG1TQC
C: A-6BG1QC02
D: A-6BG1QC03
E: A-6BG1QC05
F: A-6BG1QC06
G: A-6BG1QC07
H: A-6BG1QC08
J: A-6BG1QC09
K: A-6BG1QC05S

**FIG. 13**

| Item No. 見出番号 | Part No. 部品番号 | Mark 記号 | Description 部品名称 | | Req'd 個数 | Remarks : serial No. 備考：実施号車 |
|---|---|---|---|---|---|---|
| 1 | Z-1-22140-561-3 | | MUFFLER | ﾏﾌﾗ | 1 | A |
| - | Z-1-22140-560-2 | | MUFFLER | ﾏﾌﾗ | 1 | B |
| 2 | Z-1-22159-120-0 | | BAND | ﾊﾞﾝﾄﾞ | 1 | A,B |
| 3 | Z-9-0912-0410-0 | | NUT | ﾅｯﾄ | 4 | A,B |
| 4 | Z-1-22151-466-0 | | BRACKET | ﾌﾞﾗｹｯﾄ | 1 | A,B |
| 5 | Z-1-22151-468-4 | | BRACKET | ﾌﾞﾗｹｯﾄ | 1 | A |
| - | Z-1-22151-700-1 | | BRACKET | ﾌﾞﾗｹｯﾄ | 1 | B -1996.6 |
| - | Z-1-22151-740-0 | | BRACKET | ﾌﾞﾗｹｯﾄ | 1 | B 1996.7- |
| 6 | Z-0-5014-1025-0 | | BOLT | ﾎﾞﾙﾄ | 4 | A & B -1997.7 |
| - | Z-0-2868-1025-0 | | BOLT | ﾎﾞﾙﾄ | 4 | A & B 1997.8- |
| 7 | Z-1-09400-027-0 | | NUT | ﾅｯﾄ | 3 | A |
| - | Z-1-09400-027-0 | | NUT | ﾅｯﾄ | 4 | B |
| 8 | Z-1-09500-008-0 | | WASHER | ﾜｯｼｬ | 3 | A |
| - | Z-1-09500-008-0 | | WASHER | ﾜｯｼｬ | 4 | B |
| 9 | Z-1-14145-069-0 | | GASKET | ｶﾞｽｹｯﾄ | 1 | A |
| - | Z-1-14145-091-0 | | GASKET | ｶﾞｽｹｯﾄ | 1 | B |
| 10 | Z-1-22151-714-1 | | STAY | ｽﾃｰ | 1 | A & B -1996.6 |
| - | Z-1-22151-739-0 | | STAY | ｽﾃｰ | 1 | A & B 1996.7- |
| 11 | Z-0-1080-6455-0 | | BOLT | ﾎﾞﾙﾄ | 1 | A & B -1997.7 |
| - | Z-0-2888-1450-0 | | BOLT | ﾎﾞﾙﾄ | 1 | A & B 1997.8- |
| 12 | Z-0-2868-1040-0 | | BOLT | ﾎﾞﾙﾄ | 2 | A,B |
| 13 | Z-1-09000-199-1 | | BOLT | ﾎﾞﾙﾄ | 1 | A & B -1997.7 |
| - | Z-0-2808-6013-0 | | BOLT | ﾎﾞﾙﾄ | 1 | A & B 1997.8- |
| 14 | Z-9-0915-0514-0 | | WASHER | ﾜｯｼｬ | 1 | A & B -1997.7 |
| 15 | Z-9-0916-4514-0 | | WASHER | ﾜｯｼｬ | 1 | A & B -1997.7 |
| 16 | Z-9-0915-0510-0 | | WASHER | ﾜｯｼｬ | 1 | A & B -1997.7 |

# FIG. 14 OIL PIPE
オイルパイプ

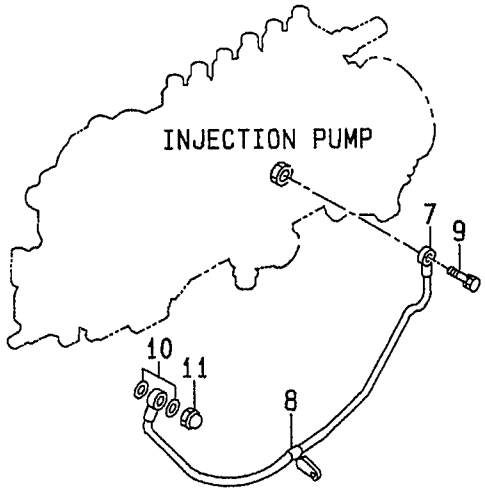


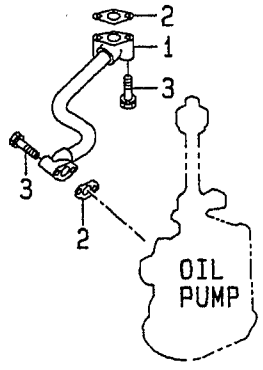


A-6BG1QC -1999.3
A-6BG1TQC -1999.3

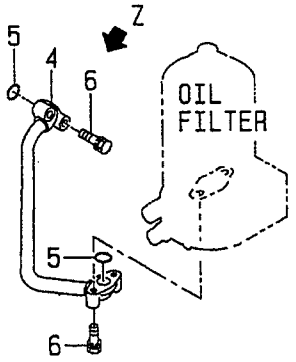


Z A-6BG1QC02,A-6BG1QC03
A-6BG1QC05,A-6BG1QC06
A-6BG1QC07,A-6BG1QC08
A-6BG1QC09,A-6BG1QC05S
A-6BG1QC 1999.4-
A-6BG1TQC 1999.4-

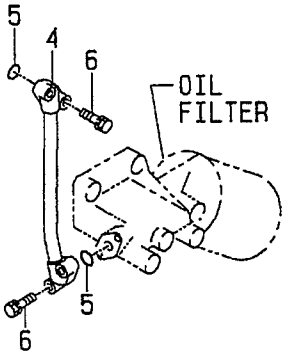


A-6BG1TQC

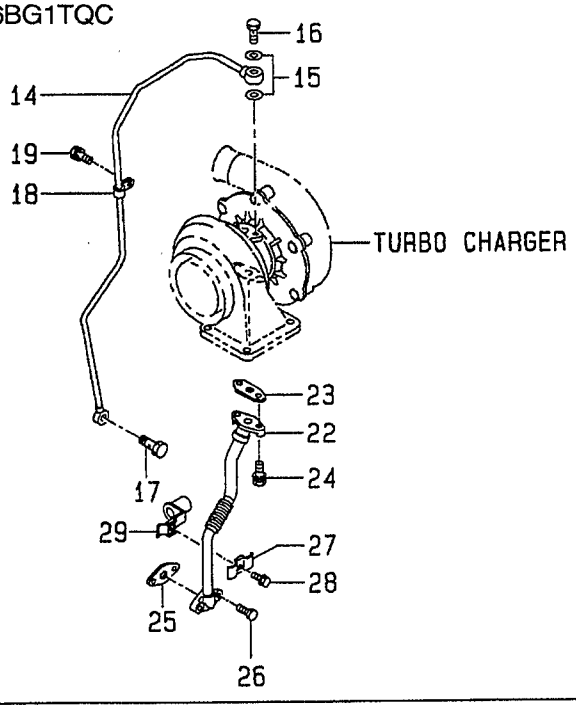


A-6BG1TQC -1999.3

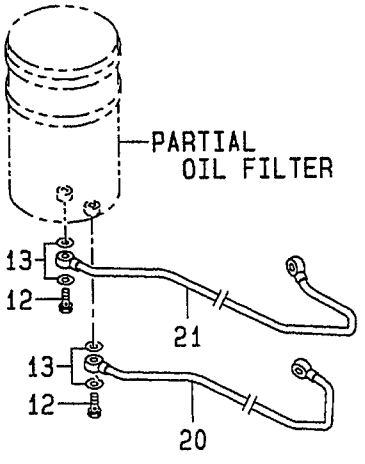

A: A-6BG1QC
B: A-6BG1TQC
C: A-6BG1QC02
D: A-6BG1QC03
E: A-6BG1QC05
F: A-6BG1QC06
G: A-6BG1QC07
H: A-6BG1QC08
J: A-6BG1QC09
K: A-6BG1QC05S

# FIG. 14

| Item No. 見出番号 | Part No. 部品番号 | Mark 記号 | Description 部品名称 | | Req'd 個数 | Remarks : serial No. 備考：実施号車 |
|---|---|---|---|---|---|---|
| K1 | Z-1-87811-031-5 | | ENGINE OVERHAUL REPAIR KIT | ｴﾝｼﾞﾝｵｰﾊﾞﾎｰﾙ ﾘﾍﾟｱｰｷｯﾄ | 1 | A INC.2,5,10 & etc. |
| K2 | Z-1-87811-223-3 | | ENGINE OVERHAUL REPAIR KIT | ｴﾝｼﾞﾝｵｰﾊﾞﾎｰﾙ ﾘﾍﾟｱｰｷｯﾄ | 1 | B INC.2,5,10,15,23,25 & etc. |
| K3 | Z-1-87811-628-3 | | ENGINE OVERHAUL REPAIR KIT | ｴﾝｼﾞﾝｵｰﾊﾞﾎｰﾙ ﾘﾍﾟｱｰｷｯﾄ | 1 | C,D,E,F,H,J,K INC.2,5,10 |
| K4 | Z-1-87811-887-1 | | ENGINE OVERHAUL REPAIR KIT | ｴﾝｼﾞﾝｵｰﾊﾞﾎｰﾙ ﾘﾍﾟｱｰｷｯﾄ | 1 | G INC.2,5,10 & etc. |
| 1 | Z-1-13311-532-2 | | PIPE | ﾊﾟｲﾌﾟ | 1 | |
| 2 | Z-9-09921-188-0 | * | PACKING | ﾊﾟｯｷﾝｸﾞ | 2 | |
| 3 | Z-0-5004-0840-0 | | BOLT | ﾎﾞﾙﾄ | 4 | A & B -1997.7 |
| - | Z-0-2808-0840-0 | | BOLT | ﾎﾞﾙﾄ | 4 | A & B 1997.8- |
| - | Z-0-2808-0840-0 | | BOLT | ﾎﾞﾙﾄ | 4 | C,D,E,F,G,H,J,K |
| 4 | Z-5-13311-208-0 | | PIPE | ﾊﾟｲﾌﾟ | 1 | A -1999.3 |
| - | Z-5-13311-119-0 | | PIPE | ﾊﾟｲﾌﾟ | 1 | A 1999.4- |
| - | Z-1-13313-604-1 | | PIPE | ﾊﾟｲﾌﾟ | 1 | B -1999.3 |
| - | Z-1-13313-565-0 | | PIPE | ﾊﾟｲﾌﾟ | 1 | B 1999.4- |
| - | Z-5-13311-119-0 | | PIPE | ﾊﾟｲﾌﾟ | 1 | C,D,E,F,G,H,J,K |
| 5 | Z-1-09623-462-0 | * | O RING | Oﾘﾝｸﾞ | 2 | |
| 6 | Z-0-2868-0840-0 | | BOLT | ﾎﾞﾙﾄ | 4 | A,C,D,E,F,G,H,J,K |
| - | Z-0-5004-0835-0 | | BOLT | ﾎﾞﾙﾄ | 4 | B -1999.3 |
| - | Z-0-2868-0840-0 | | BOLT | ﾎﾞﾙﾄ | 4 | B 1999.4- |
| 7 | Z-5-13311-205-0 | | PIPE | ﾊﾟｲﾌﾟ | 1 | A,C,D,E,F,G,H,J,K INC.8 |
| - | Z-1-13313-603-0 | | PIPE | ﾊﾟｲﾌﾟ | 1 | B |
| 8 | Z-9-09917-105-1 | | CLIP | ｸﾘｯﾌﾟ | 1 | A,C,D,E,F,G,H,J,K |
| 9 | Z-1-09675-077-0 | | BOLT,EYE | ﾎﾞﾙﾄ | 1 | A,C,D,E,F,G,H,J,K |
| 10 | Z-1-09630-083-0 | * | PACKING | ﾊﾟｯｷﾝｸﾞ | 2 | |
| 11 | Z-9-09844-022-0 | | NUT | ﾅｯﾄ | 1 | |
| 12 | Z-1-09675-086-0 | | BOLT,EYE | ﾎﾞﾙﾄ | 4 | B -1999.3 |
| 13 | Z-1-09630-085-0 | | PACKING | ﾊﾟｯｷﾝｸﾞ | 8 | B -1999.3 |
| 14 | Z-1-13313-599-0 | | PIPE | ﾊﾟｲﾌﾟ | 1 | B |
| 15 | Z-9-0957-1410-0 | * | GASKET | ｶﾞｽｹｯﾄ | 2 | B |
| 16 | Z-8-94107-713-2 | | BOLT,EYE | ﾎﾞﾙﾄ | 1 | B |
| 17 | Z-1-09675-081-0 | | BOLT,EYE | ﾎﾞﾙﾄ | 1 | B |
| 18 | Z-5-09704-054-1 | | CLIP | ｸﾘｯﾌﾟ | 1 | B |
| 19 | Z-0-5004-0816-0 | | BOLT | ﾎﾞﾙﾄ | 1 | B -1997.7 |
| - | Z-0-2808-0812-0 | | BOLT | ﾎﾞﾙﾄ | 1 | B 1997.8- |

# FIG. 14 OIL PIPE
オイルパイプ

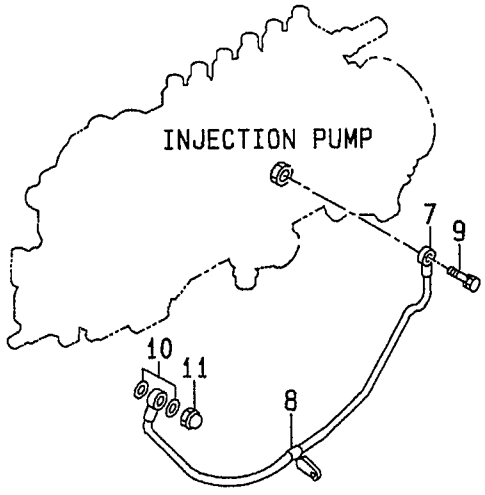


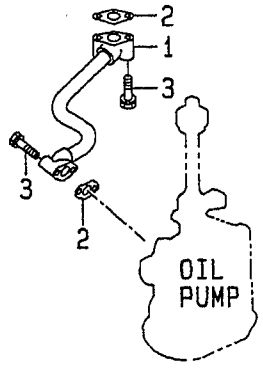


A-6BG1QC -1999.3
A-6BG1TQC -1999.3

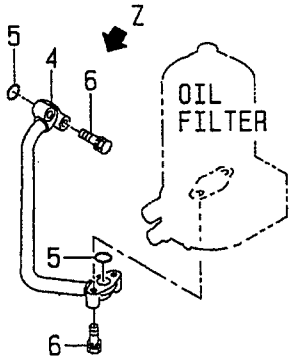


Z A-6BG1QC02,A-6BG1QC03
A-6BG1QC05,A-6BG1QC06
A-6BG1QC07,A-6BG1QC08
A-6BG1QC09,A-6BG1QC05S
A-6BG1QC 1999.4-
A-6BG1TQC 1999.4-

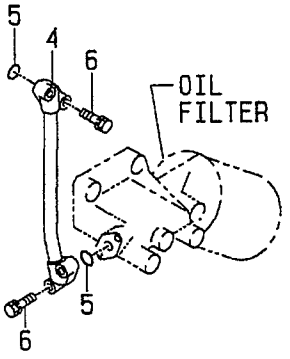


A-6BG1TQC

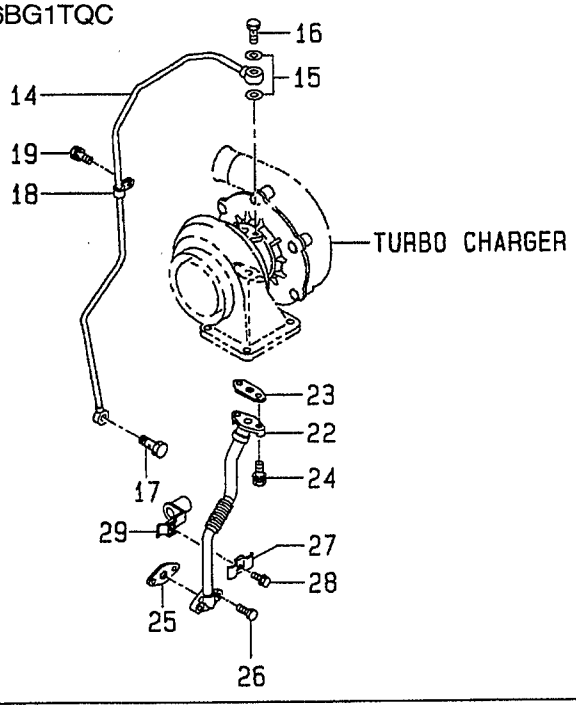


A-6BG1TQC -1999.3

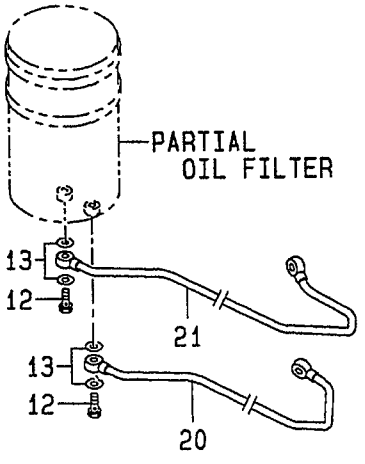

A: A-6BG1QC
B: A-6BG1TQC
C: A-6BG1QC02
D: A-6BG1QC03
E: A-6BG1QC05
F: A-6BG1QC06
G: A-6BG1QC07
H: A-6BG1QC08
J: A-6BG1QC09
K: A-6BG1QC05S

**FIG. 14**

| Item No. 見出番号 | Part No. 部品番号 | Mark 記号 | Description 部品名称 | | Req'd 個数 | Remarks : serial No. 備考：実施号車 |
|---|---|---|---|---|---|---|
| 20 | Z-1-13312-469-0 | | PIPE | ﾊﾟｲﾌﾟ | 1 | B -1999.3 |
| 21 | Z-1-13312-470-1 | | PIPE | ﾊﾟｲﾌﾟ | 1 | B -1999.3 |
| 22 | Z-1-13313-611-0 | | PIPE | ﾊﾟｲﾌﾟ | 1 | B |
| 23 | Z-1-09637-058-1 | * | PACKING | ﾊﾟｯｷﾝｸﾞ | 1 | B |
| 24 | Z-0-5005-1025-0 | | BOLT | ﾎﾞﾙﾄ | 2 | B -1997.7 |
| - | Z-0-2878-1025-0 | | BOLT | ﾎﾞﾙﾄ | 2 | B 1997.8- |
| 25 | Z-1-09637-060-0 | * | PACKING | ﾊﾟｯｷﾝｸﾞ | 1 | B -2000.5 |
| - | Z-8-94370-663-0 | * | PACKING | ﾊﾟｯｷﾝｸﾞ | 1 | B 2000.6- |
| 26 | Z-0-5004-0850-0 | | BOLT | ﾎﾞﾙﾄ | 2 | B -1997.7 |
| - | Z-0-2808-0850-0 | | BOLT | ﾎﾞﾙﾄ | 2 | B 1997.8- |
| 27 | Z-9-09716-114-0 | | CLIP | ｸﾘｯﾌﾟ | 1 | B -1999.4 |
| 28 | Z-0-5004-0625-0 | | BOLT | ﾎﾞﾙﾄ | 1 | B -1999.4 |
| 29 | Z-1-09701-242-0 | | CLIP | ｸﾘｯﾌﾟ | 1 | B -1999.4 |

## FIG. 15 OIL PUMP
オイルポンプ

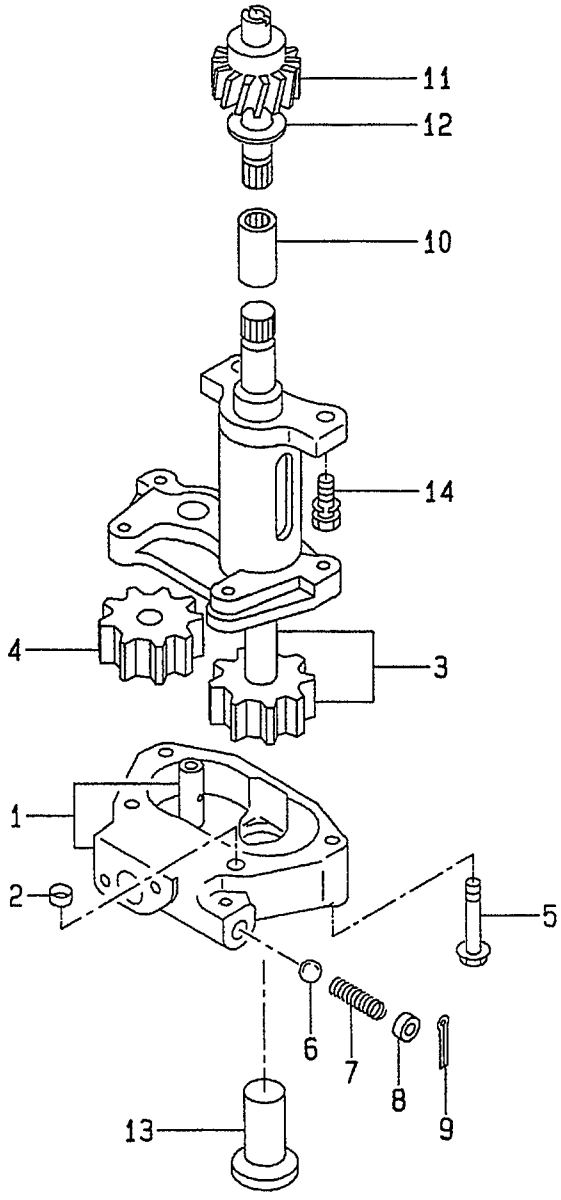

A: A-6BG1QC
B: A-6BG1TQC
C: A-6BG1QC02
D: A-6BG1QC03
E: A-6BG1QC05
F: A-6BG1QC06
G: A-6BG1QC07
H: A-6BG1QC08
J: A-6BG1QC09
K: A-6BG1QC05S

**FIG. 15**

| Item No. 見出番号 | Part No. 部品番号 | Mark 記号 | Description 部品名称 | | Req'd 個数 | Remarks : serial No. 備考：実施号車 |
|---|---|---|---|---|---|---|
| A | Z-1-13100-204-0 | | OIL PUMP ASSY | ｵｲﾙﾎﾟﾝﾌﾟｱｯｾﾝ | 1 | INC.1-13 |
| 1 | Z-1-13113-047-0 | | COVER | ｶﾊﾞｰ | 1 | INC.2 |
| 2 | Z-1-13119-003-0 | | DOWEL | ﾀﾞｳｴﾙ | 1 | |
| 3 | Z-5-13121-005-0 | | GEAR,DRIVE | ｷﾞﾔｰ | 1 | |
| 4 | Z-5-13125-001-0 | | GEAR,DRIVEN | ｷﾞﾔｰ | 1 | |
| 5 | Z-1-09044-047-0 | | BOLT | ﾎﾞﾙﾄ | 4 | |
| 6 | Z-5-09843-003-0 | | BALL | ﾎﾞｰﾙ | 1 | |
| 7 | Z-5-09580-098-0 | | SPRING | ｽﾌﾟﾘﾝｸﾞ | 1 | |
| 8 | Z-5-13165-004-0 | | SEAT | ｼｰﾄ | 1 | |
| 9 | Z-9-0810-4030-0 | | PIN,SPLIT | ﾋﾟﾝ | 1 | |
| 10 | Z-1-13123-016-0 | | COUPLING | ｶｯﾌﾟﾘﾝｸﾞ | 1 | |
| 11 | Z-1-13128-018-0 | | PINION | ﾋﾟﾆｵﾝ | 1 | |
| 12 | Z-9-13119-010-0 | | COLLAR | ｶﾗｰ | 1 | |
| 13 | Z-1-13140-079-0 | | STRAINER | ｽﾄﾚｰﾅ | 1 | |
| 14 | Z-0-5004-1025-0 | | BOLT | ﾎﾞﾙﾄ | 2 | A & B -1997.1 |
| - | Z-0-2868-1025-0 | | BOLT | ﾎﾞﾙﾄ | 2 | A & B 1997.2- |
| - | Z-0-2868-1025-0 | | BOLT | ﾎﾞﾙﾄ | 2 | C,D,E,F,G,H,J,K |

## FIG. 16 OIL FILTER (A) (-1999.3)
オイルフィルタ

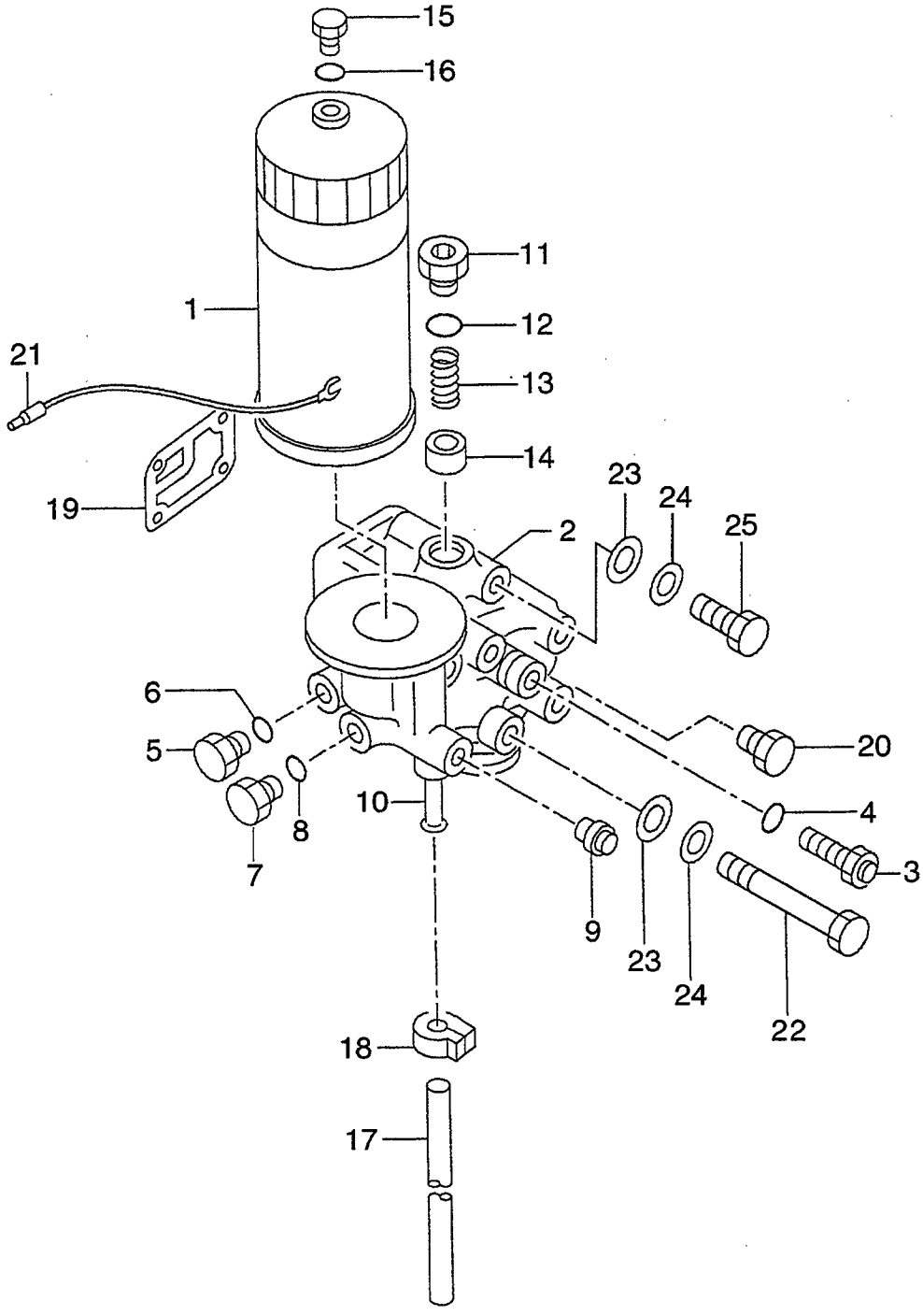

A: A-6BG1QC
B: A-6BG1TQC
C: A-6BG1QC02
D: A-6BG1QC03
E: A-6BG1QC05
F: A-6BG1QC06
G: A-6BG1QC07
H: A-6BG1QC08
J: A-6BG1QC09
K: A-6BG1QC05S

# FIG. 16

| Item No. 見出番号 | Part No. 部品番号 | Mark 記号 | Description 部品名称 | | Req'd 個数 | Remarks : serial No. 備考：実施号車 |
|---|---|---|---|---|---|---|
| A1 | Z-1-13200-655-6 | | OIL FILTER ASSY | ｵｲﾙﾌｨﾙﾀｱｯｾﾝ | 1 | A |
| | | | | | | INC.1-16 |
| A2 | Z-1-13211-147-1 | | SUB BODY ASSY | ｻﾌﾞﾎﾞﾃﾞｰｱｯｾﾝ | 1 | A |
| | | | | | | INC.2-14 |
| K1 | Z-1-87811-031-5 | | ENGINE OVERHAUL | ｴﾝｼﾞﾝｵｰﾊﾞﾎｰﾙ | 1 | A |
| | | | REPAIR KIT | ﾘﾍﾟｱｰｷｯﾄ | | INC.19,24 & etc. |
| 1 | 20801-01391 | | ELEMENT | ｴﾚﾒﾝﾄ | 1 | A |
| | | | | | | INC.15,16 |
| 2 | Z-1-13211-149-1 | | BODY | ﾎﾞﾃﾞｰ | 1 | A |
| 3 | Z-1-13260-062-1 | | VALVE,OVER FLOW | ﾊﾞﾙﾌﾞ | 1 | A |
| | | | | | | INC.4 |
| 4 | Z-1-09623-163-0 | | O RING | Oﾘﾝｸﾞ | 1 | A |
| 5 | Z-1-13219-152-0 | | PLUG | ﾌﾟﾗｸﾞ | 1 | A |
| 6 | Z-1-13219-188-0 | | O RING | Oﾘﾝｸﾞ | 1 | A |
| 7 | Z-9-13226-011-0 | | PLUG | ﾌﾟﾗｸﾞ | 1 | A |
| 8 | Z-9-09920-526-0 | | O RING | Oﾘﾝｸﾞ | 1 | A |
| 9 | Z-1-13219-295-0 | | PLUG | ﾌﾟﾗｸﾞ | 1 | A |
| 10 | Z-1-13219-150-0 | | PIPE | ﾊﾟｲﾌﾟ | 1 | A |
| A3 | Z-1-13260-076-0 | | VALVE ASSY | ﾊﾞﾙﾌﾞｱｯｾﾝ | 1 | A |
| | | | | | | INC.11-14 |
| 11 | Z-1-13219-235-0 | | PLUG | ﾌﾟﾗｸﾞ | 1 | A |
| 12 | Z-1-13219-190-0 | | PACKING | ﾊﾟｯｷﾝｸﾞ | 1 | A |
| 13 | Z-1-13219-191-0 | | SPRING | ｽﾌﾟﾘﾝｸﾞ | 1 | A |
| 14 | Z-1-13262-008-0 | | VALVE,RELIEF | ﾊﾞﾙﾌﾞ | 1 | A |
| 15 | Z-1-13219-192-0 | | PLUG | ﾌﾟﾗｸﾞ | 1 | A |
| 16 | Z-5-09623-024-0 | | O RING | Oﾘﾝｸﾞ | 1 | A |
| 17 | Z-9-09914-701-0 | | HOSE,VINYL | ﾎｰｽ | 1 | A |
| 18 | Z-9-09715-098-0 | | CLIP | ｸﾘｯﾌﾟ | 1 | A |
| 19 | Z-8-94370-670-0 | * | PACKING | ﾊﾟｯｷﾝｸﾞ | 1 | A |
| 20 | Z-1-09604-094-0 | | PLUG | ﾌﾟﾗｸﾞ | 1 | A |
| 21 | Z-9-8293-1743-0 | | CABLE,OIL FILTER | ｹｰﾌﾞﾙ | 1 | A |
| 22 | Z-8-94148-617-1 | | BOLT | ﾎﾞﾙﾄ | 1 | A |
| 23 | Z-9-0916-0510-0 | | WASHER | ﾜｯｼｬ | 2 | A |
| 24 | Z-9-0957-2010-0 | * | GASKET | ｶﾞｽｹｯﾄ | 2 | A |
| 25 | Z-9-09800-928-1 | | BOLT | ﾎﾞﾙﾄ | 1 | A |
| 26 | Z-9-13226-011-0 | + | PLUG | ﾌﾟﾗｸﾞ | 1 | A |

## FIG. 16A OIL FILTER (A) (1999.4-)
オイルフィルタ

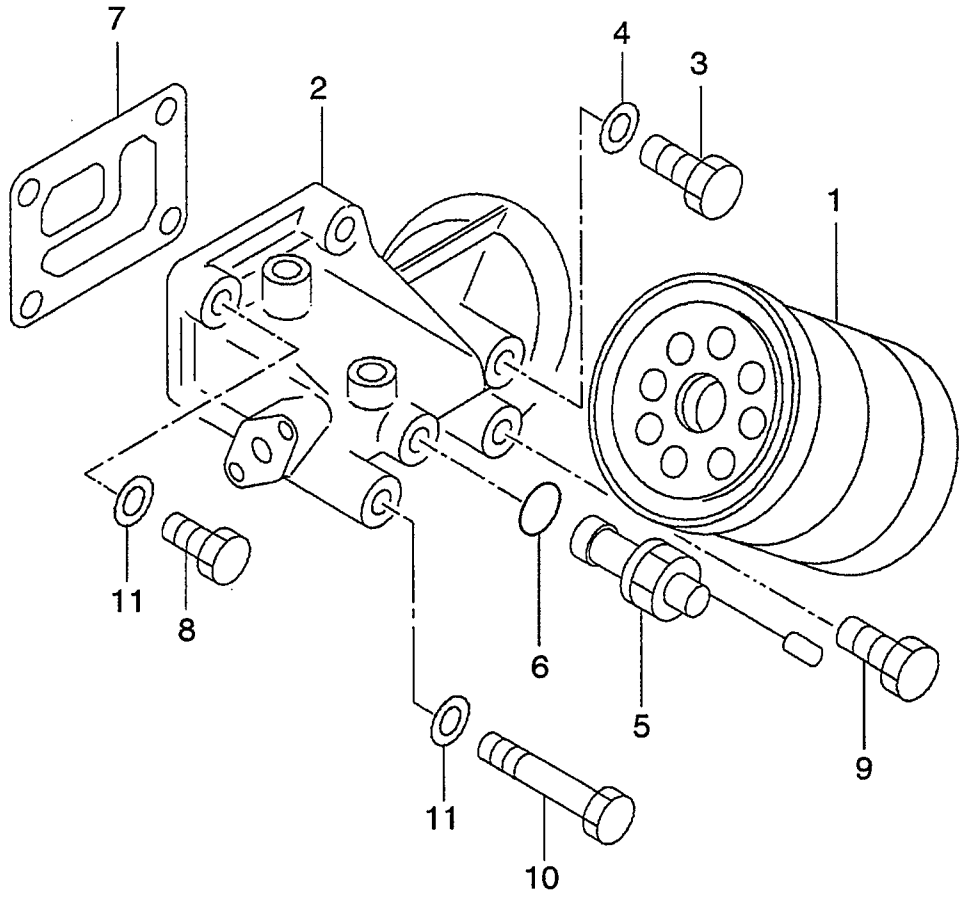

A: A-6BG1QC
B: A-6BG1TQC
C: A-6BG1QC02
D: A-6BG1QC03
E: A-6BG1QC05
F: A-6BG1QC06
G: A-6BG1QC07
H: A-6BG1QC08
J: A-6BG1QC09
K: A-6BG1QC05S

# FIG. 16A

| Item No. 見出番号 | Part No. 部品番号 | Mark 記号 | Description 部品名称 | | Req'd 個数 | Remarks : serial No. 備考：実施号車 |
|---|---|---|---|---|---|---|
| A | Z-1-13200-550-3 | | OIL FILTER ASSY | ｵｲﾙﾌｨﾙﾀｱｯｾﾝ | 1 | A<br>INC.1-6 |
| K | Z-1-87811-031-5 | | ENGINE OVERHAUL<br>REPAIR KIT | ｴﾝｼﾞﾝｵｰﾊﾞﾎｰﾙ<br>ﾘﾍﾟｱｰｷｯﾄ | 1 | A<br>INC.7,11 & etc. |
| 1 | Z-1-13240-075-0 | | ELEMENT | ｴﾚﾒﾝﾄ | 1 | A |
| 2 | Z-1-13212-093-1 | | BODY | ﾎﾞﾃﾞｰ | 1 | A |
| 3 | Z-9-13226-011-0 | | PLUG | ﾌﾟﾗｸﾞ | 1 | A |
| 4 | Z-9-0956-2215-0 | | GASKET | ｶﾞｽｹｯﾄ | 1 | A |
| 5 | Z-1-13260-062-1 | | VALVE,OVER FLOW | ﾊﾞﾙﾌﾞ | 1 | A<br>INC.6 |
| 6 | Z-1-09623-163-0 | | O RING | Oﾘﾝｸﾞ | 1 | A |
| 7 | Z-8-94370-670-0 | * | PACKING | ﾊﾟｯｷﾝｸﾞ | 1 | A |
| 8 | Z-9-09800-928-1 | | BOLT | ﾎﾞﾙﾄ | 1 | A |
| 9 | Z-1-09604-094-0 | | PLUG | ﾌﾟﾗｸﾞ | 1 | A |
| 10 | Z-8-94148-617-1 | | BOLT | ﾎﾞﾙﾄ | 1 | A<br>-1999.12 |
| 11 | Z-9-0957-2010-0 | * | GASKET | ｶﾞｽｹｯﾄ | 2 | A |
| 12 | Z-9-09914-701-0 | + | HOSE,VINYL | ﾎｰｽ | 1 | A |
| 13 | Z-9-09715-098-0 | + | CLIP | ｸﾘｯﾌﾟ | 1 | A |

## FIG. 17 OIL FILTER (B) (-1999.3)
オイルフィルタ

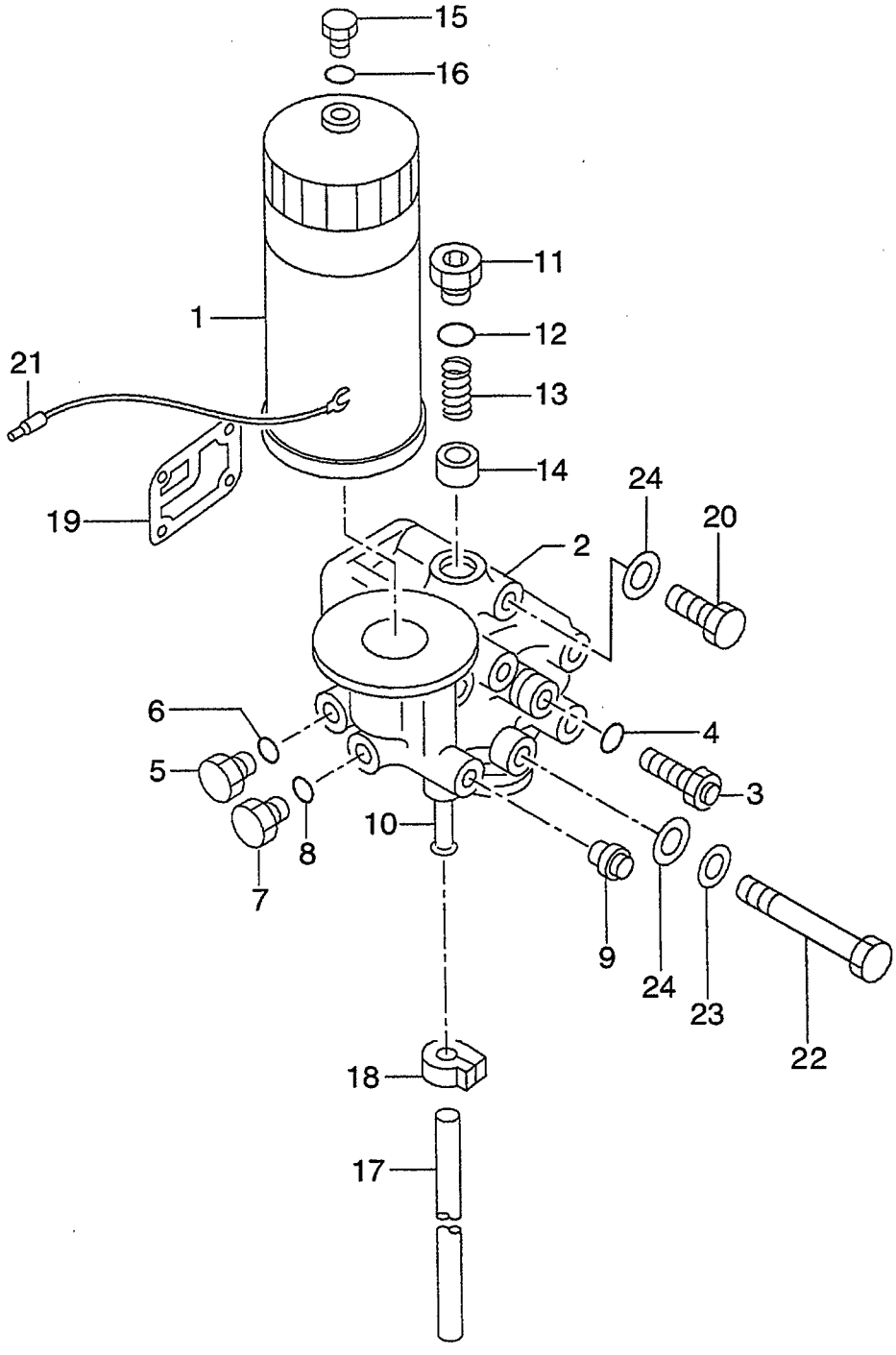

A: A-6BG1QC
B: A-6BG1TQC
C: A-6BG1QC02
D: A-6BG1QC03
E: A-6BG1QC05
F: A-6BG1QC06
G: A-6BG1QC07
H: A-6BG1QC08
J: A-6BG1QC09
K: A-6BG1QC05S

**FIG. 17**

| Item No. 見出番号 | Part No. 部品番号 | Mark 記号 | Description 部品名称 | | Req'd 個数 | Remarks : serial No. 備考：実施号車 |
|---|---|---|---|---|---|---|
| A1 | Z-1-13200-746-4 | | OIL FILTER ASSY | ｵｲﾙﾌｨﾙﾀｱｯｾﾝ | 1 | B INC.1-16 |
| K1 | Z-1-87811-223-3 | | ENGINE OVERHAUL REPAIR KIT | ｴﾝｼﾞﾝｵｰﾊﾞﾎｰﾙ ﾘﾍﾟｱｰｷｯﾄ | 1 | B INC.19,24 & etc. |
| 1 | 20801-01391 | | ELEMENT | ｴﾚﾒﾝﾄ | 1 | B INC.15,16 |
| 2 | Z-1-13211-163-1 | | COVER | ｶﾊﾞｰ | 1 | B INC.3-15 |
| 3 | Z-1-13260-062-1 | | VALVE,OVER FLOW | ﾊﾞﾙﾌﾞ | 1 | B INC.4 |
| 4 | Z-1-09623-163-0 | | O RING | Oﾘﾝｸﾞ | 1 | B |
| 5 | Z-1-13219-152-0 | | PLUG | ﾌﾟﾗｸﾞ | 1 | B |
| 6 | Z-1-13219-188-0 | | O RING | Oﾘﾝｸﾞ | 1 | B |
| 7 | Z-1-13219-152-0 | | PLUG | ﾌﾟﾗｸﾞ | 1 | B |
| 8 | Z-9-09920-526-0 | | O RING | Oﾘﾝｸﾞ | 1 | B |
| 9 | Z-1-13219-295-0 | | PLUG | ﾌﾟﾗｸﾞ | 1 | B |
| 10 | Z-1-13219-150-0 | | PIPE | ﾊﾟｲﾌﾟ | 1 | B |
| A2 | Z-1-13260-076-0 | | VALVE ASSY | ﾊﾞﾙﾌﾞｱｯｾﾝ | 1 | B INC.11-14 |
| 11 | Z-1-13219-235-0 | | PLUG,VALVE | ﾌﾟﾗｸﾞ | 1 | B |
| 12 | Z-1-13219-190-0 | | PACKING | ﾊﾟｯｷﾝｸﾞ | 1 | B |
| 13 | Z-1-13219-191-0 | | SPRING | ｽﾌﾟﾘﾝｸﾞ | 1 | B |
| 14 | Z-1-13262-008-0 | | VALVE,RELIEF | ﾊﾞﾙﾌﾞ | 1 | B |
| 15 | Z-1-13219-192-0 | | PLUG | ﾌﾟﾗｸﾞ | 1 | B |
| 16 | Z-5-09623-024-0 | | O RING | Oﾘﾝｸﾞ | 1 | B |
| 17 | Z-9-09914-701-0 | | HOSE,VINYL | ﾎｰｽ | 1 | B |
| 18 | Z-9-09715-098-0 | | CLIP | ｸﾘｯﾌﾟ | 1 | B |
| 19 | Z-8-94370-670-0 | * | PACKING | ﾊﾟｯｷﾝｸﾞ | 1 | B |
| - | Z-9-0957-2010-0 | +* | PACKING | ﾊﾟｯｷﾝｸﾞ | 6 | B -1999.2 |
| - | Z-9-0957-2010-0 | +* | PACKING | ﾊﾟｯｷﾝｸﾞ | 5 | B 1999.3 |
| 20 | Z-8-94148-617-1 | + | BOLT | ﾎﾞﾙﾄ | 1 | B |
| - | Z-0-2868-1035-0 | | BOLT | ﾎﾞﾙﾄ | 2 | B 1997.8- |
| - | Z-0-5014-1040-0 | | BOLT | ﾎﾞﾙﾄ | 2 | B -1997.7 |
| - | Z-0-2868-1040-0 | | BOLT | ﾎﾞﾙﾄ | 2 | B 1997.8- |
| 21 | Z-9-8293-1743-0 | | CABLE,OIL FILTER | ｹｰﾌﾞﾙ | 1 | B |
| 22 | Z-9-09800-928-1 | | BOLT | ﾎﾞﾙﾄ | 1 | B |
| 23 | Z-9-0916-0510-0 | | WASHER | ﾜｯｼｬ | 1 | B 1997.9-1999.2 |
| 24 | Z-9-0957-2010-0 | * | GASKET | ｶﾞｽｹｯﾄ | 2 | B |

## FIG. 17A OIL FILTER (B) (1999.4-)
オイルフィルタ

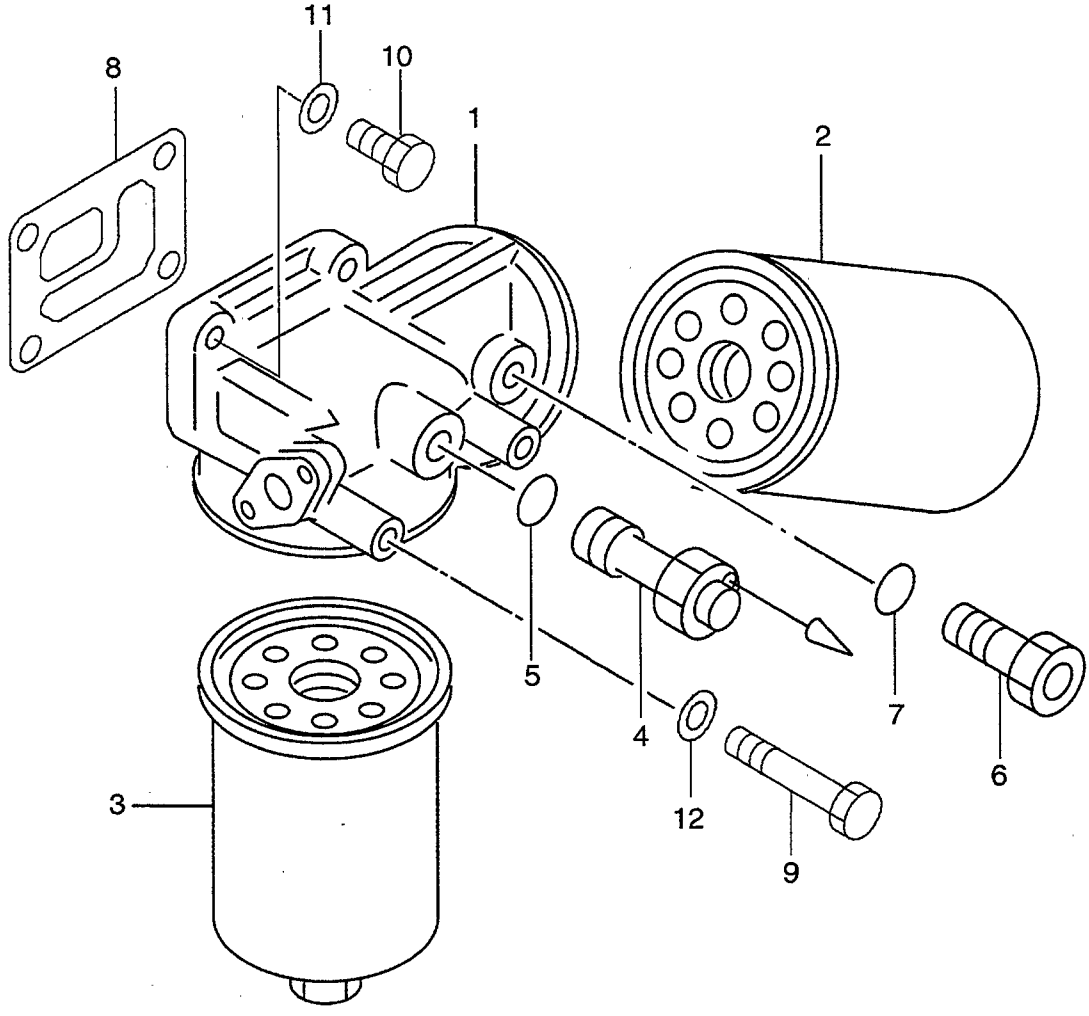

A: A-6BG1QC
B: A-6BG1TQC
C: A-6BG1QC02
D: A-6BG1QC03
E: A-6BG1QC05
F: A-6BG1QC06
G: A-6BG1QC07
H: A-6BG1QC08
J: A-6BG1QC09
K: A-6BG1QC05S

# FIG. 17A

| Item No. 見出番号 | Part No. 部品番号 | Mark 記号 | Description 部品名称 | | Req'd 個数 | Remarks : serial No. 備考：実施号車 |
|---|---|---|---|---|---|---|
| A1 | Z-1-13200-809-1 | | OIL FILTER ASSY | ｵｲﾙﾌｨﾙﾀｱｯｾﾝ | 1 | B |
| | | | | | | INC.1-7 |
| A2 | Z-1-13211-204-1 | | BODY SUB ASSY | ﾎﾞﾃﾞｰｻﾌﾞｱｯｾﾝ | 1 | B |
| | | | | | | INC.1,4-7 |
| K | Z-1-87811-223-3 | | ENGINE OVERHAUL | ｴﾝｼﾞﾝｵｰﾊﾞﾎｰﾙ | 1 | B |
| | | | REPAIR KIT | ﾘﾍﾟｱｰｷｯﾄ | | INC.8,12 & etc. |
| 1 | NO PART NO. | # | BODY | ﾎﾞﾃﾞｰ | 1 | B |
| 2 | Z-1-13240-122-0 | | ELEMENT | ｴﾚﾒﾝﾄ | 1 | B |
| 3 | Z-1-13240-123-0 | | ELEMENT | ｴﾚﾒﾝﾄ | 1 | B |
| 4 | Z-1-13260-106-0 | | VALVE,OVER FLOW | ﾊﾞﾙﾌﾞ | 1 | B |
| 5 | Z-1-09623-163-0 | | GASKET | ｶﾞｽｹｯﾄ | 1 | B |
| 6 | Z-9-13263-010-0 | | PLUG | ﾌﾟﾗｸﾞ | 1 | B |
| 7 | Z-9-0956-2215-0 | | GASKET | ｶﾞｽｹｯﾄ | 1 | B |
| 8 | Z-8-94370-670-0 | * | GASKET | ｶﾞｽｹｯﾄ | 1 | B |
| 9 | Z-9-09800-928-1 | | BOLT | ﾎﾞﾙﾄ | 2 | B |
| 10 | Z-0-2868-1035-0 | | BOLT | ﾎﾞﾙﾄ | 2 | B |
| - | Z-8-94148-617-1 | | BOLT | ﾎﾞﾙﾄ | 1 | B |
| 11 | Z-9-0915-0510-0 | | WASHER | ﾜｯｼｬ | 1 | B |
| 12 | Z-9-0957-2010-0 | * | GASKET | ｶﾞｽｹｯﾄ | 2 | B |

## FIG. 18 OIL FILTER (C,D,E,F,G,H,J,K)
オイルフィルタ

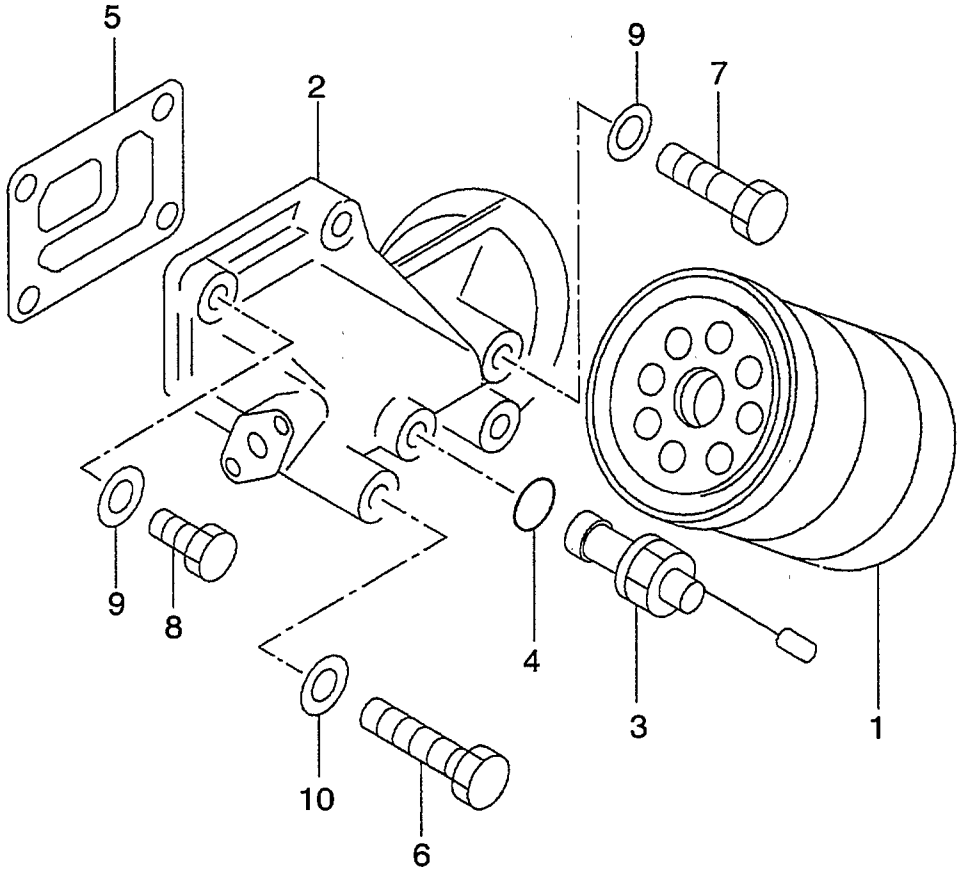

A: A-6BG1QC
B: A-6BG1TQC
C: A-6BG1QC02
D: A-6BG1QC03
E: A-6BG1QC05
F: A-6BG1QC06
G: A-6BG1QC07
H: A-6BG1QC08
J: A-6BG1QC09
K: A-6BG1QC05S

**FIG. 18**

| Item No. 見出番号 | Part No. 部品番号 | Mark 記号 | Description 部品名称 | | Req'd 個数 | Remarks : serial No. 備考：実施号車 |
|---|---|---|---|---|---|---|
| A | Z-1-13200-551-2 | | OIL FILTER ASSY | ｵｲﾙﾌｨﾙﾀｱｯｾﾝ | 1 | C,D,E,F,G,H,J,K<br>INC.1-4 |
| K1 | Z-1-87811-628-3 | | ENGINE OVERHAUL<br>REPAIR KIT | ｴﾝｼﾞﾝｵｰﾊﾞﾎｰﾙ<br>ﾘﾍﾟｱｰｷｯﾄ | 1 | C,D,E,F,H,J,K<br>INC.5,10 & etc. |
| K2 | Z-1-87811-887-1 | | ENGINE OVERHAUL<br>REPAIR KIT | ｴﾝｼﾞﾝｵｰﾊﾞﾎｰﾙ<br>ﾘﾍﾟｱｰｷｯﾄ | 1 | G<br>INC.5,10 & etc. |
| 1 | 20801-01441 | | ELEMENT | ｴﾚﾒﾝﾄ | 1 | C,D,E,F,G,H,J,K |
| 2 | Z-1-13212-130-0 | | BODY | ﾎﾞﾃﾞｰ | 1 | C,D,E,F,G,H,J,K |
| 3 | Z-1-13260-062-1 | | VALVE,OVER FLOW | ﾊﾞﾙﾌﾞ | 1 | C,D,E,F,G,H,J,K<br>INC.4 |
| 4 | Z-1-09623-163-0 | | O RING | Oﾘﾝｸﾞ | 1 | C,D,E,F,G,H,J,K |
| 5 | Z-8-94370-670-0 | * | PACKING | ﾊﾟｯｷﾝｸﾞ | 1 | C,D,E,F,G,H,J,K |
| 6 | Z-9-09800-928-1 | | BOLT | ﾎﾞﾙﾄ | 3 | C,D,E,F,G,H,J,K |
| 7 | Z-8-94148-617-1 | | BOLT | ﾎﾞﾙﾄ | 1 | C,D,E,F,G,H,J,K |
| 8 | Z-8-94148-617-1 | | BOLT | ﾎﾞﾙﾄ | 1 | C & D & E & F & G &<br>H & J & K<br>-1999.12 |
| 9 | Z-9-0916-0510-0 | | WASHER | ﾜｯｼｬ | 2 | C & D & E & F & G &<br>H & J & K<br>-1999.3 |
| 10 | Z-9-0957-2010-0 | * | GASKET | ｶﾞｽｹｯﾄ | 2 | C & D & E & F & G &<br>H & J & K<br>-1999.3 |
| - | Z-9-0957-2010-0 | * | GASKET | ｶﾞｽｹｯﾄ | 4 | C & D & E & F & G &<br>H & J & K<br>1999.4- |
| - | Z-9-0957-2010-0 | * | GASKET | ｶﾞｽｹｯﾄ | 2 | H |

## FIG. 19 PARTIAL OIL FILTER (B) (-1999.3)
パ ーシャルオイルフィルタ

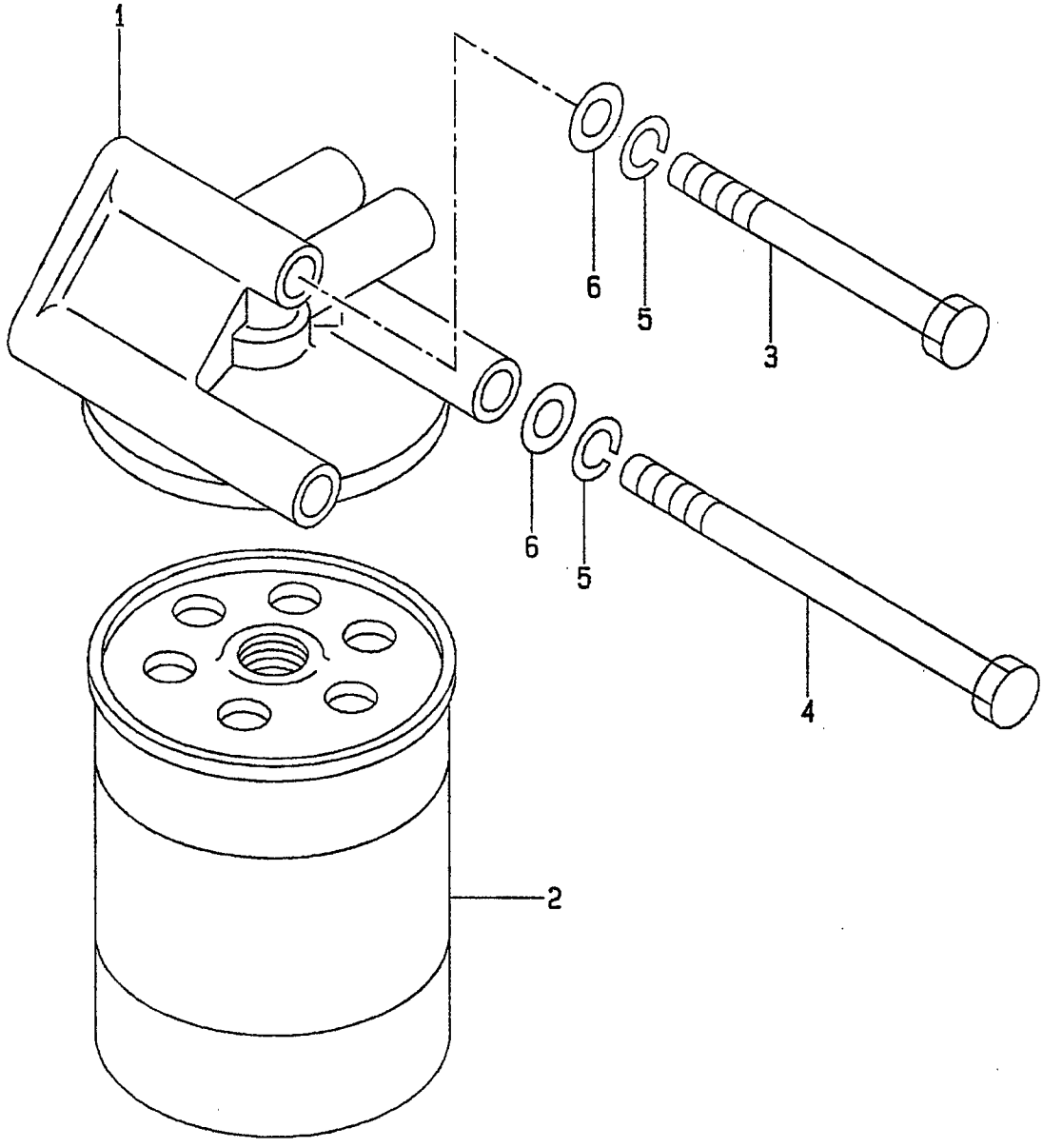

A: A-6BG1QC
B: A-6BG1TQC
C: A-6BG1QC02
D: A-6BG1QC03
E: A-6BG1QC05
F: A-6BG1QC06
G: A-6BG1QC07
H: A-6BG1QC08
J: A-6BG1QC09
K: A-6BG1QC05S

**FIG. 19**

| Item No. 見出番号 | Part No. 部品番号 | Mark 記号 | Description 部品名称 | | Req'd 個数 | Remarks : serial No. 備考：実施号車 |
|---|---|---|---|---|---|---|
| A | Z-1-13200-654-2 | | PARTIAL OIL FILTER ASSY | ﾊﾟｰｼｬﾙｵｲﾙﾌｨﾙﾀ ｱｯｾﾝ | 1 | B INC.1,2 |
| 1 | Z-1-13212-120-0 | | BODY | ﾎﾞﾃﾞｰ | 1 | B |
| 2 | 20801-01251 | | ELEMENT,OIL | ｴﾚﾒﾝﾄ | 1 | B |
| 3 | Z-8-94148-617-1 | | BOLT | ﾎﾞﾙﾄ | 1 | B |
| 4 | Z-1-09000-282-1 | | BOLT | ﾎﾞﾙﾄ | 2 | B -1997.7 |
| - | Z-0-2808-6015-0 | | BOLT | ﾎﾞﾙﾄ | 2 | B 1997.8- |
| 5 | Z-9-0915-0510-0 | | WASHER | ﾜｯｼｬ | 3 | B -1997.8 |
| - | Z-9-0915-0510-0 | | WASHER | ﾜｯｼｬ | 2 | B 1997.9-1999.2 |
| - | Z-9-0915-0510-0 | | WASHER | ﾜｯｼｬ | 1 | B 1999.3 |
| 6 | Z-9-0916-0510-0 | | WASHER | ﾜｯｼｬ | 3 | B -1997.8 |

## FIG. 20 FAN
ﾌｧﾝ

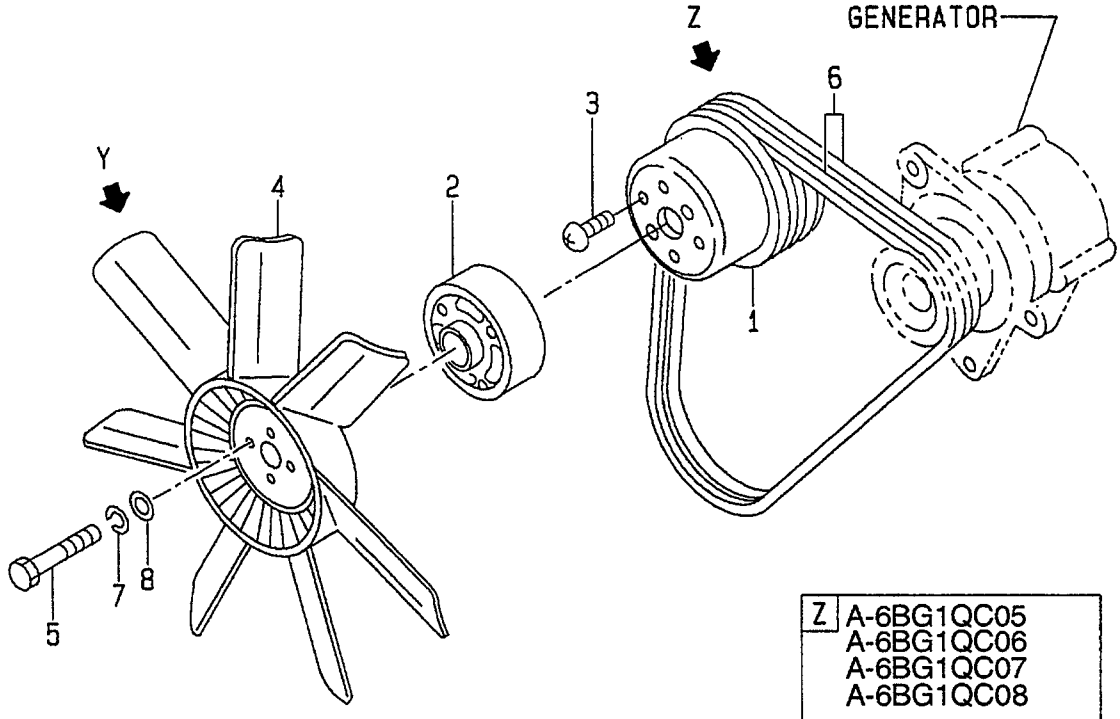


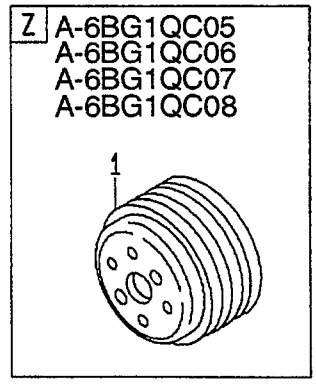


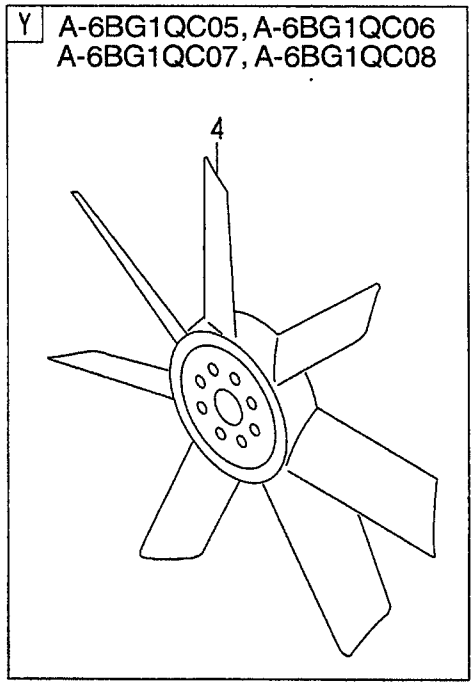

A: A-6BG1QC
B: A-6BG1TQC
C: A-6BG1QC02
D: A-6BG1QC03
E: A-6BG1QC05
F: A-6BG1QC06
G: A-6BG1QC07
H: A-6BG1QC08
J: A-6BG1QC09
K: A-6BG1QC05S

**FIG. 20**

| Item No. 見出番号 | Part No. 部品番号 | Mark 記号 | Description 部品名称 | | Req'd 個数 | Remarks : serial No. 備考：実施号車 |
|---|---|---|---|---|---|---|
| 1 | Z-5-13641-038-1 | | PULLEY | ﾌﾟｰﾘ | 1 | A & C & J<br>-1999.3 |
| - | Z-1-13641-187-0 | | PULLEY | ﾌﾟｰﾘ | 1 | A & C & J<br>1999.4- |
| - | Z-5-13641-017-1 | | PULLEY | ﾌﾟｰﾘ | 1 | B<br>-1996.10 |
| - | Z-1-13641-165-0 | | PULLEY | ﾌﾟｰﾘ | 1 | B<br>1996.11- |
| - | 530C6-62101 | | PULLEY | ﾌﾟｰﾘ | 1 | D |
| - | Z-1-13641-187-0 | | PULLEY | ﾌﾟｰﾘ | 1 | E,F,G,H,K |
| 2 | Z-1-13642-030-0 | | SPACER | ｽﾍﾟｰｻ | 1 | A & B<br>-1995.12<br>t=32.0mm |
| - | Z-1-13642-036-0 | | SPACER | ｽﾍﾟｰｻ | 1 | A & B<br>1996.1-1999.3<br>t=25.0mm |
| - | Z-1-13642-031-0 | | SPACER | ｽﾍﾟｰｻ | 1 | A & B<br>-1995.12<br>t=38.5mm |
| - | Z-8-94434-075-0 | | SPACER | ｽﾍﾟｰｻ | 1 | A & B<br>1996.1-1999.3<br>t=51.7mm |
| - | Z-1-13642-052-0 | | SPACER | ｽﾍﾟｰｻ | 1 | A<br>1999.4-<br>t=51.7mm |
| - | Z-1-13642-054-0 | | SPACER | ｽﾍﾟｰｻ | 1 | B<br>1999.4-2000.5<br>t=25.0mm |
| - | Z-1-13642-056-0 | | SPACER | ｽﾍﾟｰｻ | 1 | B<br>2000.6-<br>t=25.0mm |
| - | Z-1-13642-033-0 | | SPACER | ｽﾍﾟｰｻ | 1 | C & D & J<br>-1999.3<br>t=30.5mm |
| - | Z-1-13642-044-1 | | SPACER | ｽﾍﾟｰｻ | 1 | C & D & J<br>1999.4-<br>t=30.5mm |
| - | Z-1-13642-044-1 | | SPACER | ｽﾍﾟｰｻ | 1 | E,F,G,H<br>t=41.0mm |
| 3 | Z-9-0349-0610-0 | | SCREW | ｽｸﾘｭ | 2 | |
| 4 | Z-8-94483-897-1 | | FAN | ﾌｧﾝ | 1 | A,B,C,D,J |
| - | Z-8-97069-902-1 | | FAN | ﾌｧﾝ | 1 | E,F,G,H |
| - | Z-8-94483-894-0 | | FAN | ﾌｧﾝ | 1 | K |
| 5 | Z-1-09044-074-0 | | BOLT | ﾎﾞﾙﾄ | 4 | A & B<br>-1995.12 |
| - | Z-0-2809-0800-0 | | BOLT | ﾎﾞﾙﾄ | 4 | A<br>1996.1- |
| - | Z-1-09044-075-1 | | BOLT | ﾎﾞﾙﾄ | 4 | B<br>1996.1-2000.5 |

## FIG. 20 FAN
ﾌｧﾝ

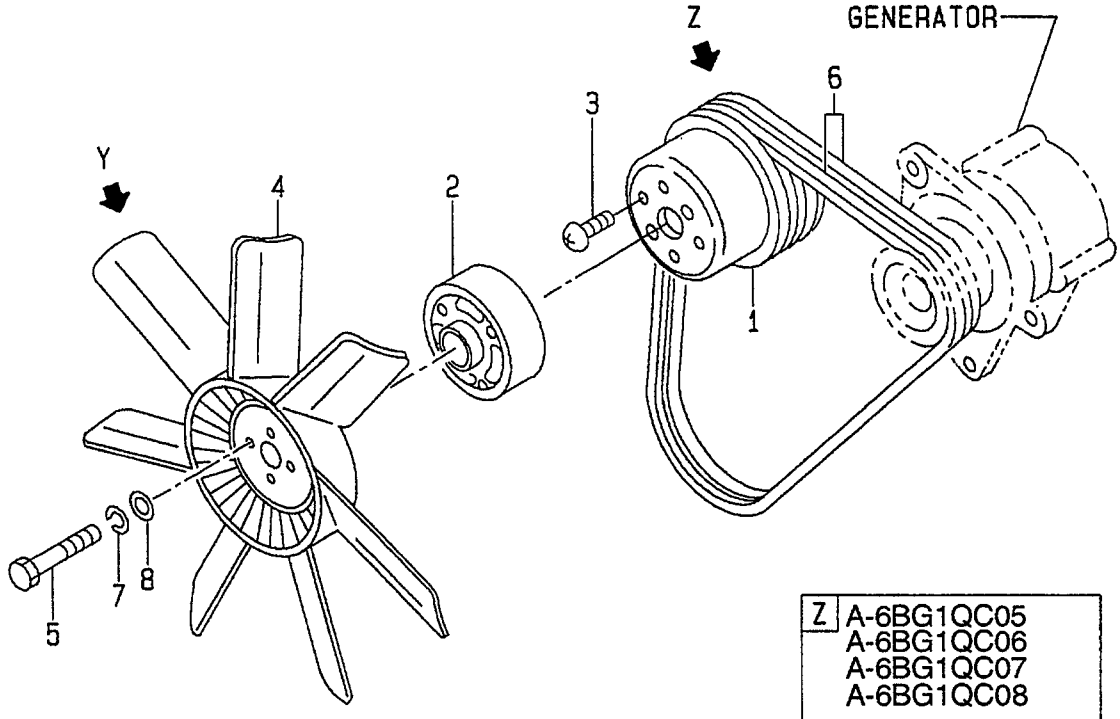


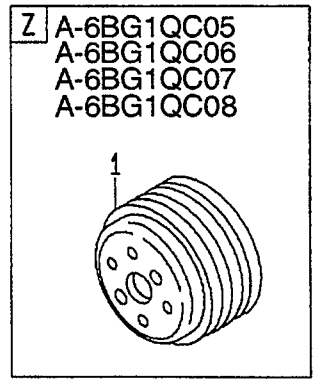


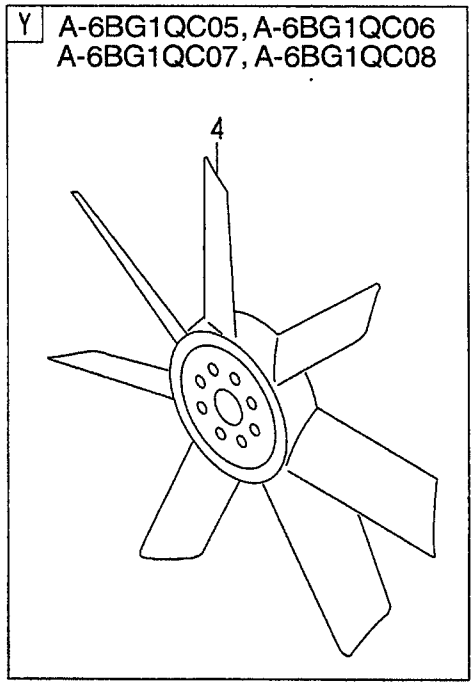

A: A-6BG1QC
B: A-6BG1TQC
C: A-6BG1QC02
D: A-6BG1QC03
E: A-6BG1QC05
F: A-6BG1QC06
G: A-6BG1QC07
H: A-6BG1QC08
J: A-6BG1QC09
K: A-6BG1QC05S

**FIG. 20**

| Item No. 見出番号 | Part No. 部品番号 | Mark 記号 | Description 部品名称 | Req'd 個数 | Remarks : serial No. 備考：実施号車 |
|---|---|---|---|---|---|
| 5 | Z-0-2808-5811-0 | | BOLT ﾎﾞﾙﾄ | 4 | B<br>2000.6- |
| - | Z-1-09044-071-1 | | BOLT ﾎﾞﾙﾄ | 4 | C,D,E,F,G,H,J |
| - | Z-0-2808-0812-0 | | BOLT ﾎﾞﾙﾄ | 4 | K |
| 6 | Z-1-13671-288-0 | | BELT ﾍﾞﾙﾄ | 1 | A & B<br>-1999.8 |
| - | Z-1-13671-443-0 | | BELT ﾍﾞﾙﾄ | 1 | A & B<br>1999.9- |
| - | 20801-04051 | | BELT ﾍﾞﾙﾄ | 1 | C,D,J |
| - | Z-1-13671-209-0 | | BELT ﾍﾞﾙﾄ | 1 | E,F,G,K |
| - | Z-1-13671-302-0 | | BELT ﾍﾞﾙﾄ | 1 | H |
| 7 | Z-9-0915-0508-0 | | WASHER ﾜｯｼｬ | 4 | 1996.1- |
| 8 | Z-9-0916-4708-0 | | WASHER ﾜｯｼｬ | 4 | A & B<br>1996.1- |
| - | Z-9-0916-4708-0 | | WASHER ﾜｯｼｬ | 4 | C,D,E,F,G,H,J,K |
| 9 | 01103-08060 | + | SCREW ｽｸﾘｭ | 4 | D |

## FIG. 21 WATER PUMP (A,B,C,D,J)
ｳｫｰﾀﾎﾟﾝﾌﾟ

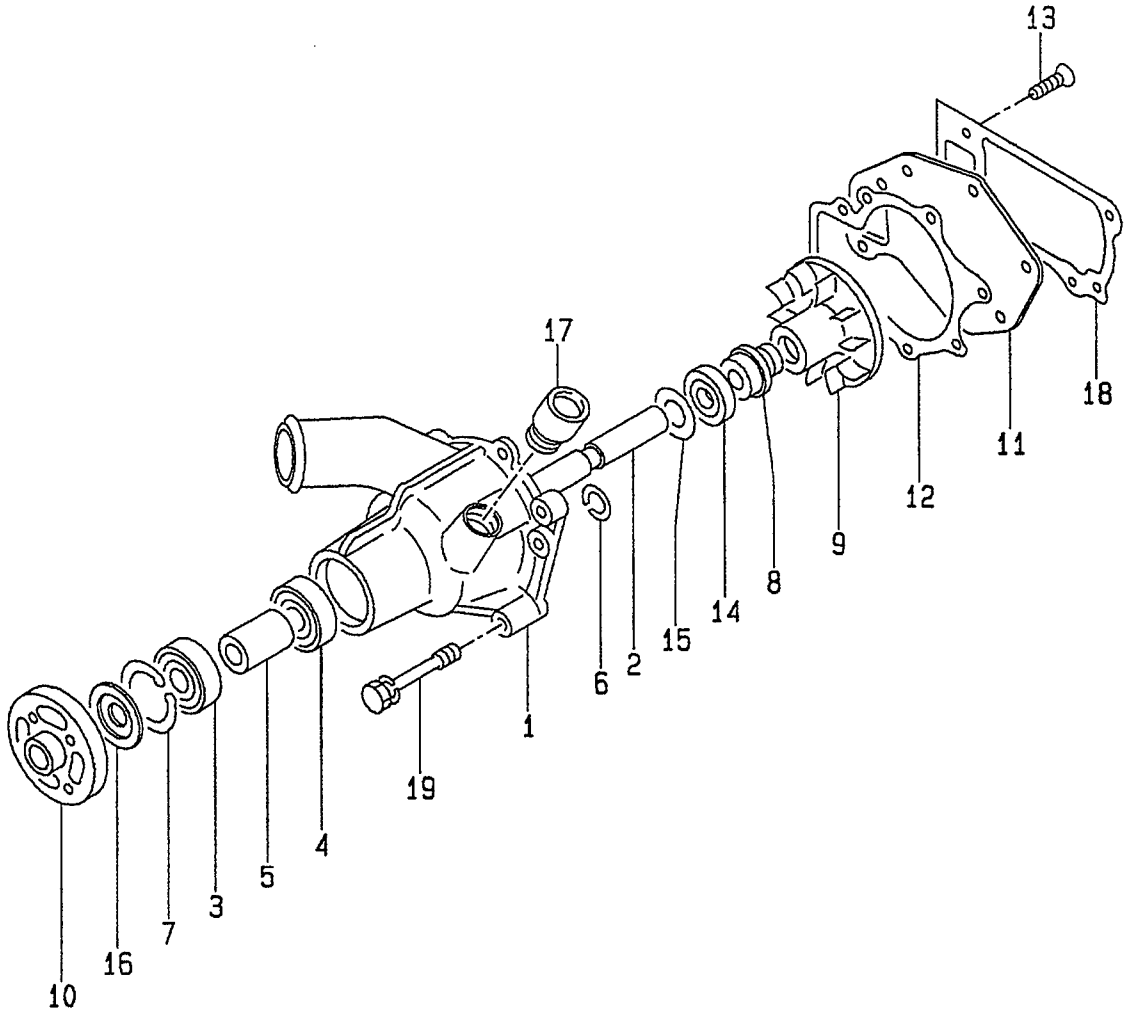

A: A-6BG1QC E: A-6BG1QC05 J: A-6BG1QC09
B: A-6BG1TQC F: A-6BG1QC06 K: A-6BG1QC05S
C: A-6BG1QC02 G: A-6BG1QC07
D: A-6BG1QC03 H: A-6BG1QC08

**FIG. 21**

| Item No. 見出番号 | Part No. 部品番号 | Mark 記号 | Description 部品名称 | | Req'd 個数 | Remarks : serial No. 備考：実施号車 |
|---|---|---|---|---|---|---|
| A | Z-1-13650-018-1 | | WATER PUMP ASSY | ｳｫｰﾀｰﾎﾟﾝﾌﾟｱｯｾﾝ | 1 | A,B,C,D,J<br>INC.1-18 |
| K1 | Z-1-87810-774-1 | | REPAIR KIT | ﾘﾍﾟｱｷｯﾄ | 1 | A & B<br>-1995.10<br>INC.2,6-9,12,14-16,18 |
| - | Z-1-87811-253-0 | | REPAIR KIT | ﾘﾍﾟｱｷｯﾄ | 1 | A & B<br>1995.11-<br>INC.2,6-9,12,14-16,18 |
| K2 | Z-1-87811-253-0 | | REPAIR KIT | ﾘﾍﾟｱｷｯﾄ | 1 | C,D,J<br>INC.2,6-9,12,14-16,18 |
| K3 | Z-1-87811-031-5 | | ENGINE OVERHAUL<br>REPAIR KIT | ｴﾝｼﾞﾝｵｰﾊﾞﾎｰﾙ<br>ﾘﾍﾟｱｰｷｯﾄ | 1 | A<br>INC.18 & etc. |
| K4 | Z-1-87811-223-3 | | ENGINE OVERHAUL<br>REPAIR KIT | ｴﾝｼﾞﾝｵｰﾊﾞﾎｰﾙ<br>ﾘﾍﾟｱｰｷｯﾄ | 1 | B<br>INC.18 & etc. |
| K5 | Z-1-87811-628-3 | | ENGINE OVERHAUL<br>REPAIR KIT | ｴﾝｼﾞﾝｵｰﾊﾞﾎｰﾙ<br>ﾘﾍﾟｱｰｷｯﾄ | 1 | C,D,J<br>INC.18 & etc. |
| 1 | NO PART NO. | | BODY | ﾎﾞﾃﾞｰ | 1 | A,B,C,D,J |
| 2 | Z-1-13631-074-0 | * | SHAFT | ｼｬﾌﾄ | 1 | A,B,C,D,J |
| 3 | Z-5-09800-051-0 | | BEARING,BALL | ﾍﾞｱﾘﾝｸﾞ | 1 | A,B,C,D,J |
| 4 | Z-5-09800-050-0 | | BEARING,BALL | ﾍﾞｱﾘﾝｸﾞ | 1 | A,B,C,D,J |
| 5 | Z-5-13634-002-0 | | SPACER | ｽﾍﾟｰｻ | 1 | A,B,C,D,J |
| 6 | Z-9-09952-143-0 | * | RING,SNAP | ﾘﾝｸﾞ | 1 | A,B,C,D,J |
| 7 | Z-9-0918-0152-0 | * | RING,SNAP | ﾘﾝｸﾞ | 1 | A & B & C & D & J<br>-2000.3 |
| - | Z-9-0918-0152-0 | * | RING,SNAP | ﾘﾝｸﾞ | 2 | A & B & C & D & J<br>2000.4- |
| 8 | Z-5-13620-006-2 | * | SEAL UNIT | ｼｰﾙﾕﾆｯﾄ | 1 | A & B & C & D & J<br>-2000.3 |
| - | Z-1-13620-023-0 | * | SEAL UNIT | ｼｰﾙﾕﾆｯﾄ | 1 | A & B & C & D & J<br>2000.4- |
| 9 | Z-9-13621-802-0 | * | WHEEL,IMPELLER | ﾎｲｰﾙ | 1 | A,B,C,D,J |
| 10 | Z-5-13642-007-2 | | PULLEY,CENTER | ﾌﾟｰﾘ | 1 | A,B,C,D,J |
| 11 | Z-9-13612-802-0 | | COVER | ｶﾊﾞｰ | 1 | A,B,C,D,J |
| 12 | Z-9-13613-613-0 | * | PACKING,COVER | ﾊﾟｯｷﾝｸﾞ | 1 | A,B,C,D,J |
| 13 | Z-9-0309-0820-0 | | SCREW | ｽｸﾘｭ | 3 | A,B,C,D,J |
| 14 | Z-5-09625-055-0 | * | SEAL,SECONDARY | ｼｰﾙ | 1 | A,B,C,D,J |
| 15 | Z-1-09503-070-0 | * | WASHER | ﾜｯｼｬ | 1 | A,B,C,D,J |
| 16 | Z-5-13639-001-0 | * | THROWER,DUST | ｽﾛﾜ | 1 | A,B,C,D,J |
| 17 | Z-1-09660-119-2 | | CONNECTOR | ｺﾈｸﾀ | 1 | A & C & D & J<br>-2000.3 |
| - | Z-8-97249-895-1 | | CONNECTOR | ｺﾈｸﾀ | 1 | A & C & D & J<br>2000.4- |
| - | Z-1-09660-119-2 | | CONNECTOR | ｺﾈｸﾀ | 1 | B<br>-2000.9 |
| - | Z-8-97249-895-1 | | CONNECTOR | ｺﾈｸﾀ | 1 | B<br>2000.10- |
| 18 | Z-8-94370-661-0 | * | PACKING | ﾊﾟｯｷﾝｸﾞ | 1 | A,B,C,D,J |
| 19 | Z-5-09030-010-1 | | BOLT | ﾎﾞﾙﾄ | 1 | A & B<br>-1997.7 |

## FIG. 21 WATER PUMP (A,B,C,D,J)
ｳｫｰﾀﾎﾟﾝﾌﾟ

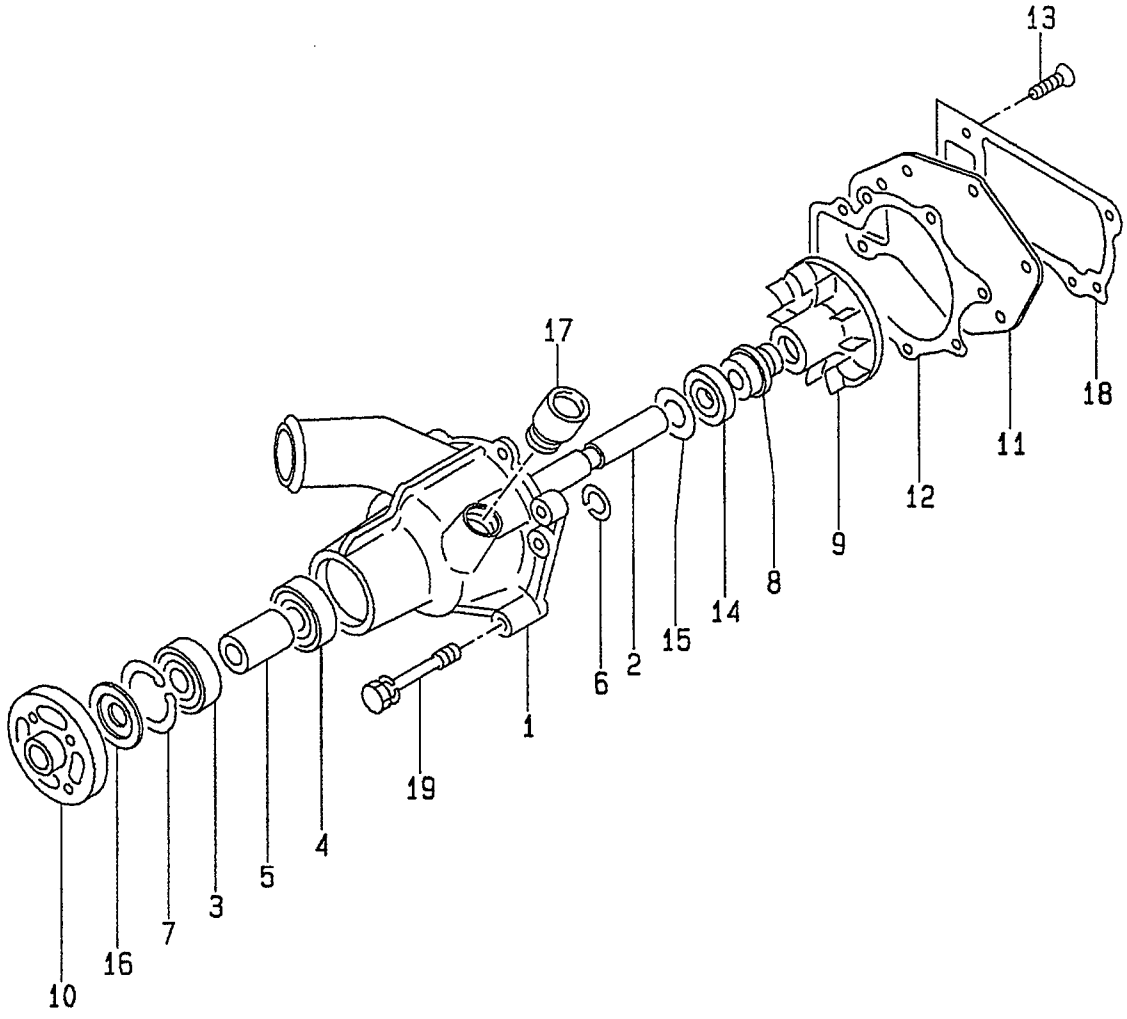

A: A-6BG1QC
B: A-6BG1TQC
C: A-6BG1QC02
D: A-6BG1QC03
E: A-6BG1QC05
F: A-6BG1QC06
G: A-6BG1QC07
H: A-6BG1QC08
J: A-6BG1QC09
K: A-6BG1QC05S

**FIG. 21**

| Item No. 見出番号 | Part No. 部品番号 | Mark 記号 | Description 部品名称 | Req'd 個数 | Remarks : serial No. 備考：実施号車 |
|---|---|---|---|---|---|
| 19 | Z-0-2808-1070-0 | | BOLT ﾎﾞﾙﾄ | 1 | A & B 1997.8- |
| - | Z-0-5004-1050-0 | | BOLT ﾎﾞﾙﾄ | 2 | A & B -1997.7 |
| - | Z-0-2808-1050-0 | | BOLT ﾎﾞﾙﾄ | 2 | A & B 1997.8- |
| - | Z-0-5004-1035-0 | | BOLT ﾎﾞﾙﾄ | 1 | A & B -1997.7 |
| - | Z-0-2868-1035-0 | | BOLT ﾎﾞﾙﾄ | 1 | A & B 1997.8- |
| - | Z-0-2808-1070-0 | | BOLT ﾎﾞﾙﾄ | 1 | C,D,J |
| - | Z-0-2808-1050-0 | | BOLT ﾎﾞﾙﾄ | 2 | C,D,J |
| - | Z-0-2868-1035-0 | | BOLT ﾎﾞﾙﾄ | 1 | C,D,J |

## FIG. 22 WATER PUMP (E,F,G,H,K)
ウォータポンプ

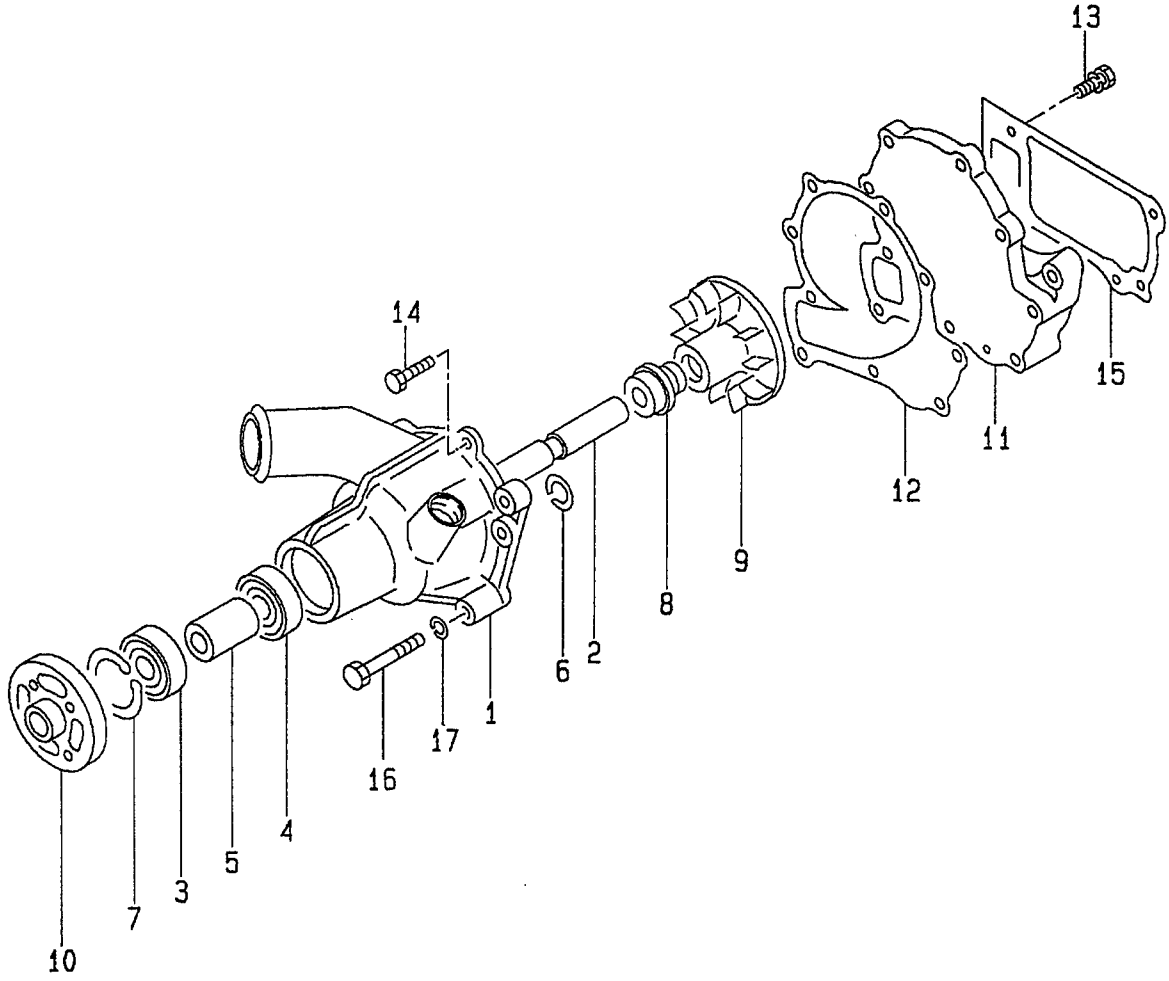

A: A-6BG1QC
B: A-6BG1TQC
C: A-6BG1QC02
D: A-6BG1QC03
E: A-6BG1QC05
F: A-6BG1QC06
G: A-6BG1QC07
H: A-6BG1QC08
J: A-6BG1QC09
K: A-6BG1QC05S

**FIG. 22**

| Item No. 見出番号 | Part No. 部品番号 | Mark 記号 | Description 部品名称 | | Req'd 個数 | Remarks : serial No. 備考：実施号車 |
|---|---|---|---|---|---|---|
| A1 | Z-1-13610-876-1 | | WATER PUMP ASSY | ｳｫｰﾀｰﾎﾟﾝﾌﾟｱｯｾﾝ | 1 | E & F & G & H & K<br>-2000.12<br>INC.1-15 |
| - | Z-1-13650-090-1 | | WATER PUMP ASSY | ｳｫｰﾀｰﾎﾟﾝﾌﾟｱｯｾﾝ | 1 | E & F & G & H & K<br>2001.1-<br>INC.1-15 |
| K1 | Z-1-87810-223-5 | | REPAIR KIT | ﾘﾍﾟｱｷｯﾄ | 1 | E,F,G,H,K<br>INC.2,6-9,12,15 |
| K2 | Z-1-87811-628-3 | | ENGINE OVERHAUL REPAIR KIT | ｴﾝｼﾞﾝｵｰﾊﾞﾎｰﾙ ﾘﾍﾟｱｰｷｯﾄ | 1 | E,F,H,K<br>INC.15 & etc. |
| K3 | Z-1-87811-887-1 | | ENGINE OVERHAUL REPAIR KIT | ｴﾝｼﾞﾝｵｰﾊﾞﾎｰﾙ ﾘﾍﾟｱｰｷｯﾄ | 1 | G<br>INC.15 & etc. |
| 1 | NO PART NO. | | BODY | ﾎﾞﾃﾞｰ | 1 | E,F,G,H,K |
| 2 | Z-5-13631-007-1 | * | SHAFT | ｼｬﾌﾄ | 1 | E,F,G,H,K |
| 3 | Z-5-09800-008-0 | | BEARING,BALL | ﾍﾞｱﾘﾝｸﾞ | 1 | E,F,G,H,K |
| 4 | Z-5-09800-008-0 | | BEARING,BALL | ﾍﾞｱﾘﾝｸﾞ | 1 | E,F,G,H,K |
| 5 | Z-5-13634-005-0 | | SPACER | ｽﾍﾟｰｻ | 1 | E,F,G,H,K |
| 6 | Z-9-09952-143-0 | * | RING,SNAP | ﾘﾝｸﾞ | 1 | E,F,G,H,K |
| 7 | Z-9-0918-0147-0 | * | RING,SNAP | ﾘﾝｸﾞ | 1 | E & F & G & H & K<br>-1995.3 |
| - | Z-9-0918-0152-0 | * | RING,SNAP | ﾘﾝｸﾞ | 1 | E & F & G & H & K<br>1995.4- |
| 8 | Z-5-13620-006-2 | * | SEAL UNIT | ｼｰﾙﾕﾆｯﾄ | 1 | E & F & G & H & K<br>-2000.3 |
| - | Z-1-13620-023-0 | * | SEAL UNIT | ｼｰﾙﾕﾆｯﾄ | 1 | E & F & G & H & K<br>2000.4- |
| 9 | Z-9-13621-802-0 | * | WHEEL,IMPELLER | ﾎｲｰﾙ | 1 | E,F,G,H,K |
| 10 | Z-5-13642-007-2 | | PULLEY,CENTER | ﾌﾟｰﾘ | 1 | E,F,G,H,K |
| 11 | Z-5-13612-007-1 | | COVER | ｶﾊﾞｰ | 1 | E,F,G,H,K |
| 12 | Z-5-13613-006-1 | * | PACKING,COVER | ﾊﾟｯｷﾝｸﾞ | 1 | E,F,G,H,K |
| 13 | Z-9-0190-0822-0 | | BOLT | ﾎﾞﾙﾄ | 1 | E,F,G,H,K |
| 14 | Z-9-0105-6045-0 | | BOLT | ﾎﾞﾙﾄ | 4 | E,F,G,H,K |
| 15 | Z-8-94370-661-0 | * | PACKING | ﾊﾟｯｷﾝｸﾞ | 1 | E,F,G,H,K |
| 16 | Z-0-1080-6090-0 | | BOLT | ﾎﾞﾙﾄ | 1 | E,F,G,H,K |
| - | Z-0-1080-6080-0 | | BOLT | ﾎﾞﾙﾄ | 1 | E,F,G,H,K |
| - | Z-0-1080-6065-0 | | BOLT | ﾎﾞﾙﾄ | 2 | E,F,G,H,K |
| 17 | Z-9-0915-0510-0 | | WASHER | ﾜｯｼｬ | 4 | E,F,G,H,K |

## FIG. 23 THERMOSTAT
サーモスタット

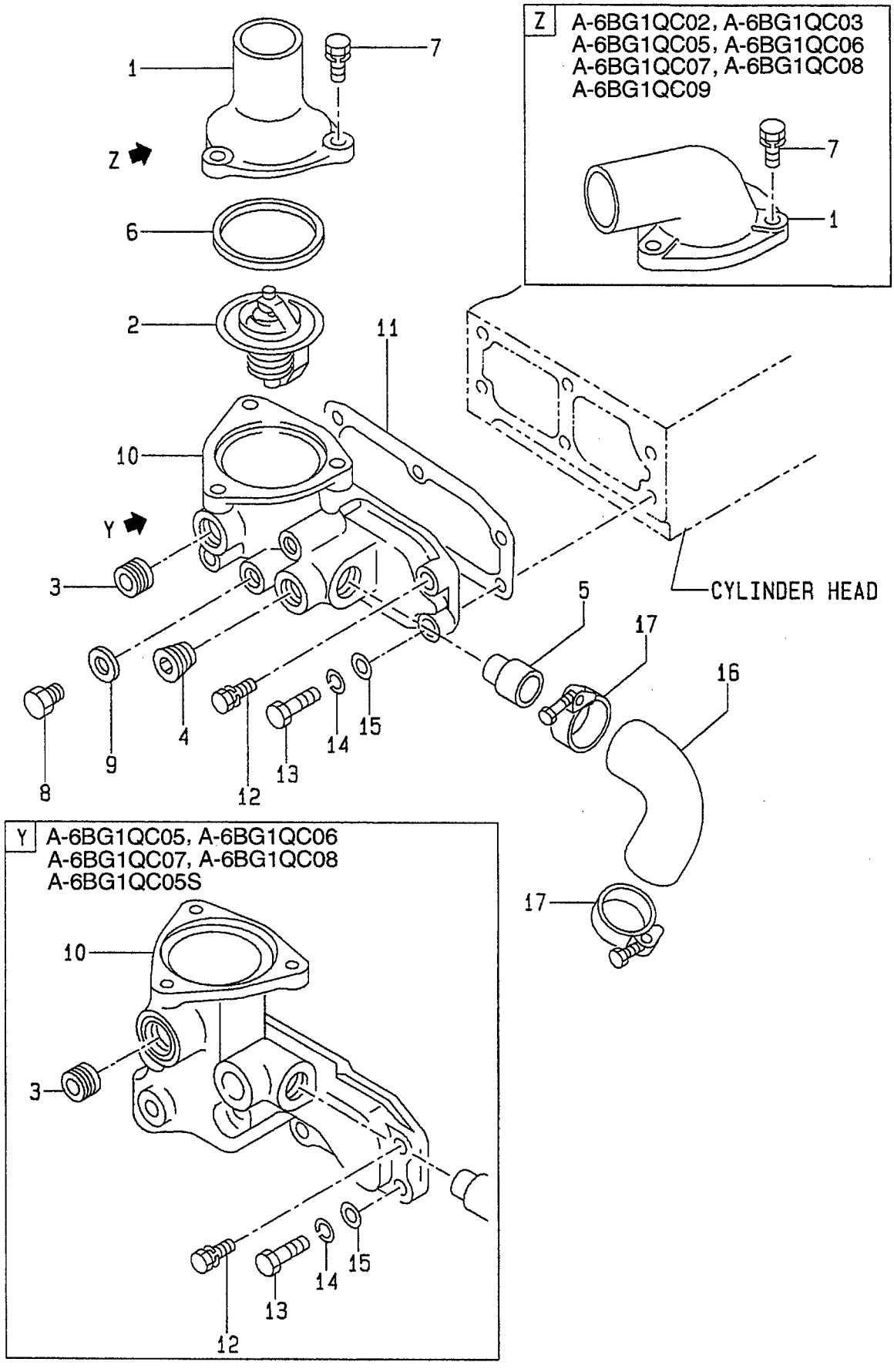

A: A-6BG1QC
B: A-6BG1TQC
C: A-6BG1QC02
D: A-6BG1QC03
E: A-6BG1QC05
F: A-6BG1QC06
G: A-6BG1QC07
H: A-6BG1QC08
J: A-6BG1QC09
K: A-6BG1QC05S

**FIG. 23**

| Item No. 見出番号 | Part No. 部品番号 | Mark 記号 | Description 部品名称 | | Req'd 個数 | Remarks : serial No. 備考：実施号車 |
|---|---|---|---|---|---|---|
| K1 | Z-1-87811-031-5 | | ENGINE OVERHAUL REPAIR KIT | ｴﾝｼﾞﾝｵｰﾊﾞﾎｰﾙ ﾘﾍﾟｱｰｷｯﾄ | 1 | A INC.6,11 & etc. |
| K2 | Z-1-87811-223-3 | | ENGINE OVERHAUL REPAIR KIT | ｴﾝｼﾞﾝｵｰﾊﾞﾎｰﾙ ﾘﾍﾟｱｰｷｯﾄ | 1 | B INC.6,11 & etc. |
| K3 | Z-1-87811-628-3 | | ENGINE OVERHAUL REPAIR KIT | ｴﾝｼﾞﾝｵｰﾊﾞﾎｰﾙ ﾘﾍﾟｱｰｷｯﾄ | 1 | C,D,E,F,H,J,K INC.6,11 & etc. |
| K4 | Z-1-87811-887-1 | | ENGINE OVERHAUL REPAIR KIT | ｴﾝｼﾞﾝｵｰﾊﾞﾎｰﾙ ﾘﾍﾟｱｰｷｯﾄ | 1 | G INC.6,11 & etc. |
| K5 | Z-1-87811-242-1 | | ENGINE TOP OVERHAUL REPAIR KIT | ｴﾝｼﾞﾝﾄｯﾌﾟｵｰﾊﾞﾎｰﾙ ﾘﾍﾟｱｰｷｯﾄ | 1 | A,B INC.6,11 & etc. |
| K6 | Z-1-87810-945-2 | | ENGINE TOP OVERHAUL REPAIR KIT | ｴﾝｼﾞﾝﾄｯﾌﾟｵｰﾊﾞﾎｰﾙ ﾘﾍﾟｱｰｷｯﾄ | 1 | C,D,E,F,G,H,J,K INC.6,11 & etc. |
| 1 | Z-1-13713-037-0 | | JOINT,THERMOSTAT | ｼﾞｮｲﾝﾄ | 1 | A & B -2001.11 |
| - | Z-8-97138-003-2 | | JOINT,THERMOSTAT | ｼﾞｮｲﾝﾄ | 1 | A & B 2001.12- |
| - | Z-5-13713-009-1 | | PIPE,THERMOSTAT | ﾊﾟｲﾌﾟ | 1 | C,D,E,F,G,H,J |
| - | Z-1-13713-037-0 | | JOINT,THERMOSTAT | ｼﾞｮｲﾝﾄ | 1 | K |
| 2 | Z-1-13770-071-0 | | THERMOSTAT | ｻｰﾓｽﾀｯﾄ | 1 | A |
| - | Z-1-13770-070-0 | | THERMOSTAT | ｻｰﾓｽﾀｯﾄ | 1 | B -1996.2 |
| - | Z-1-13770-071-0 | | THERMOSTAT | ｻｰﾓｽﾀｯﾄ | 1 | B 1996.3- |
| - | Z-1-13770-070-0 | | THERMOSTAT | ｻｰﾓｽﾀｯﾄ | 1 | C,D,E,F,G,H,J,K |
| 3 | Z-9-09664-005-0 | | PLUG | ﾌﾟﾗｸﾞ | 1 | |
| 4 | Z-9-09662-034-0 | | PLUG | ﾌﾟﾗｸﾞ | 1 | A,B,C,D,J |
| 5 | Z-5-13721-015-2 | | PIPE | ﾊﾟｲﾌﾟ | 1 | -2000.3 |
| - | Z-8-97253-362-1 | | PIPE | ﾊﾟｲﾌﾟ | 1 | 2000.4- |
| 6 | Z-1-13743-016-0 | * | PACKING | ﾊﾟｯｷﾝｸﾞ | 1 | |
| 7 | Z-0-5014-0825-0 | | BOLT | ﾎﾞﾙﾄ | 3 | |
| 8 | Z-9-09661-005-0 | | PLUG | ﾌﾟﾗｸﾞ | 1 | A,C,D,J |
| - | Z-9-09661-005-0 | | PLUG | ﾌﾟﾗｸﾞ | 2 | B |
| 9 | Z-9-0957-1416-0 | | PACKING | ﾊﾟｯｷﾝｸﾞ | 1 | A,C,D,J |
| - | Z-9-0957-1416-0 | | PACKING | ﾊﾟｯｷﾝｸﾞ | 3 | B |
| 10 | Z-5-13716-026-0 | | HOUSING,THERMOSTAT | ﾊｳｼﾞﾝｸﾞ | 1 | A,B,C,D,J |
| - | Z-5-13716-034-2 | | HOUSING,THERMOSTAT | ﾊｳｼﾞﾝｸﾞ | 1 | E & F & G & H & K -1998.10 |
| - | Z-1-13716-194-0 | | HOUSING,THERMOSTAT | ﾊｳｼﾞﾝｸﾞ | 1 | E & F & G & H & K 1998.11- |
| 11 | Z-1-13741-013-0 | * | PACKING | ﾊﾟｯｷﾝｸﾞ | 1 | -2000.12 |
| - | Z-8-97235-789-1 | * | PACKING | ﾊﾟｯｷﾝｸﾞ | 1 | 2001.1- |
| 12 | Z-0-5014-1035-0 | | BOLT | ﾎﾞﾙﾄ | 1 | A & B -1997.7 |
| - | Z-0-2868-1035-0 | | BOLT | ﾎﾞﾙﾄ | 1 | A & B 1997.8- |
| - | Z-0-2868-1035-0 | | BOLT | ﾎﾞﾙﾄ | 3 | C,D,E,F,G,J,K |
| - | Z-0-2080-1025-0 | | BOLT | ﾎﾞﾙﾄ | 1 | E & F & G & H & K 1998.1- |
| - | Z-0-2868-1035-0 | | BOLT | ﾎﾞﾙﾄ | 1 | H |
| 13 | Z-0-1080-6095-0 | | BOLT | ﾎﾞﾙﾄ | 3 | A,B,C,D,J |

## FIG. 23 THERMOSTAT
サーモスタット

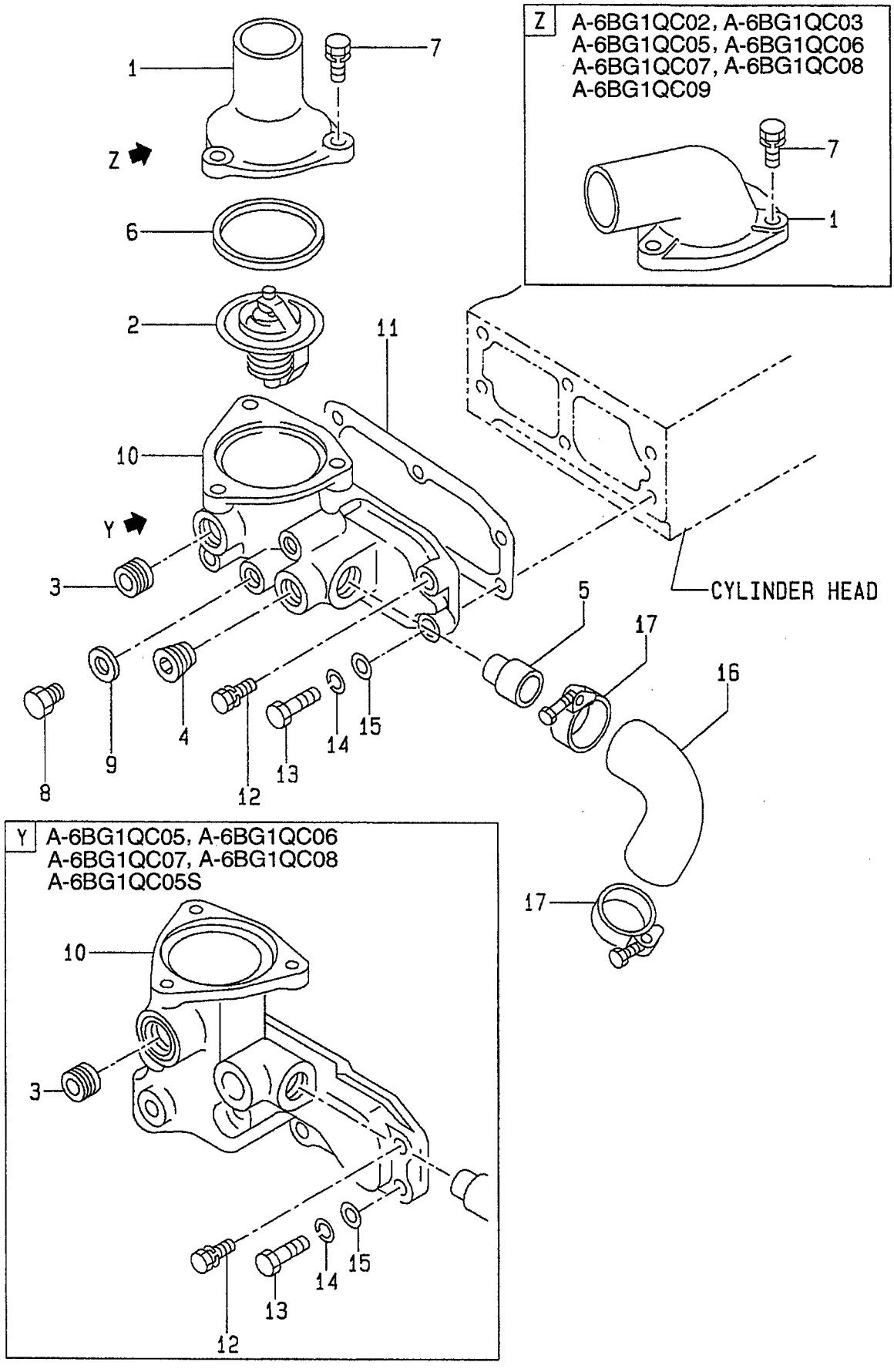

A: A-6BG1QC
B: A-6BG1TQC
C: A-6BG1QC02
D: A-6BG1QC03
E: A-6BG1QC05
F: A-6BG1QC06
G: A-6BG1QC07
H: A-6BG1QC08
J: A-6BG1QC09
K: A-6BG1QC05S

FIG. 23

| Item No. 見出番号 | Part No. 部品番号 | Mark 記号 | Description 部品名称 | | Req'd 個数 | Remarks : serial No. 備考：実施号車 |
|---|---|---|---|---|---|---|
| 13 | Z-0-1080-6095-0 | | BOLT | ﾎﾞﾙﾄ | 2 | E & F & G & H & K<br>1998.1- |
| 14 | Z-9-0915-0510-0 | | WASHER | ﾜｯｼｬ | 3 | |
| 15 | Z-9-0916-0510-0 | | WASHER | ﾜｯｼｬ | 3 | |
| 16 | Z-5-13721-014-1 | | HOSE | ﾎｰｽ | 1 | A<br>-1997.6 |
| - | Z-8-97138-086-0 | | HOSE | ﾎｰｽ | 1 | A<br>1997.7-2000.3 |
| - | Z-5-13721-014-1 | | HOSE | ﾎｰｽ | 1 | B<br>-1997.4 |
| - | Z-8-97138-086-0 | | HOSE | ﾎｰｽ | 1 | B<br>1997.5-2000.4 |
| - | Z-8-97224-204-0 | | HOSE | ﾎｰｽ | 1 | B<br>2000.5- |
| - | Z-8-97138-086-0 | | HOSE | ﾎｰｽ | 1 | C & D & E & F & G &<br>H & J & K<br>-2000.3 |
| - | Z-8-97224-204-0 | | HOSE | ﾎｰｽ | 1 | A & C & D & E & F & G &<br>H & J & K<br>2000.4- |
| 17 | Z-5-09704-046-0 | | CLIP | ｸﾘｯﾌﾟ | 2 | |

## FIG. 24 OIL COOLER
オイルクーラ

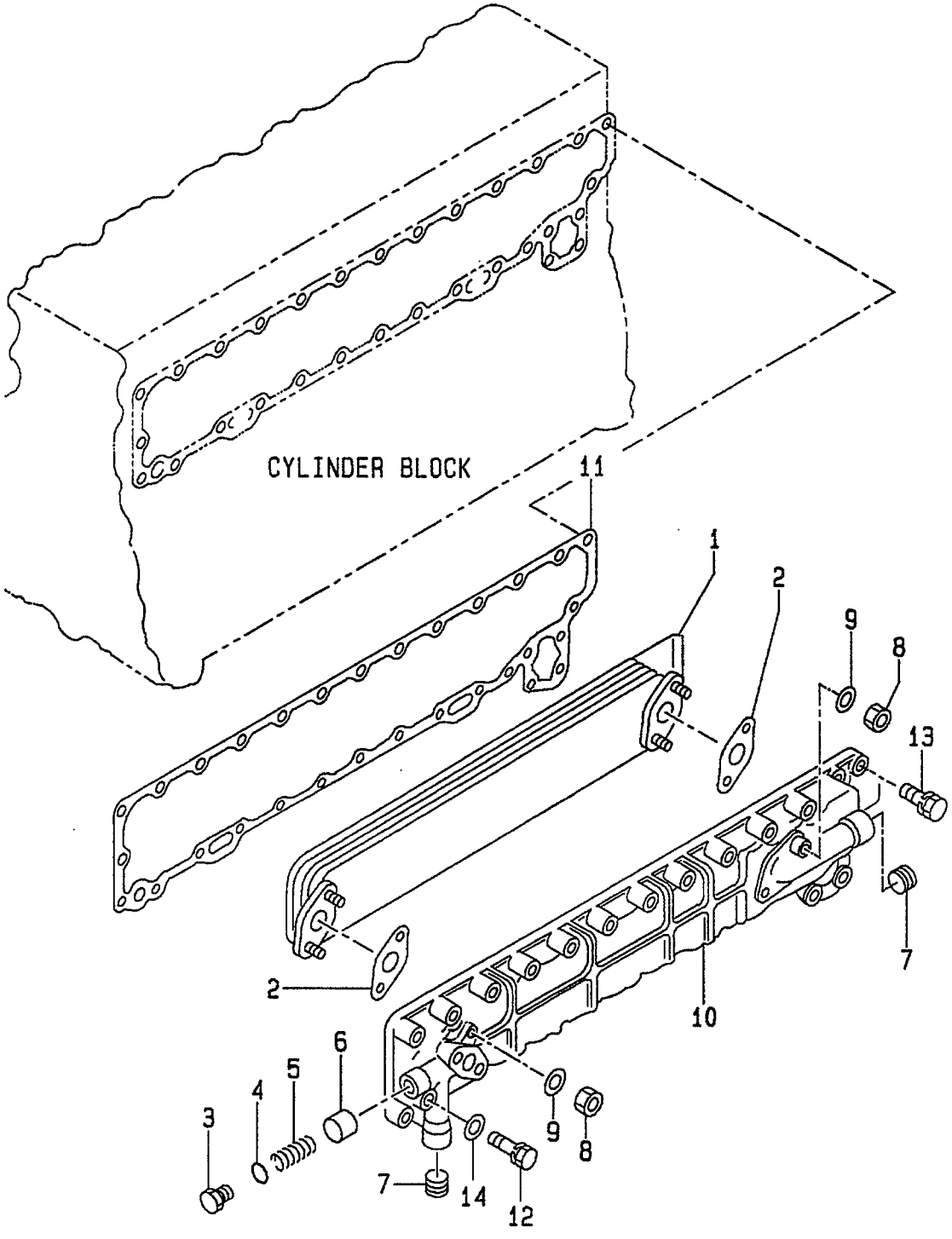

A: A-6BG1QC
B: A-6BG1TQC
C: A-6BG1QC02
D: A-6BG1QC03
E: A-6BG1QC05
F: A-6BG1QC06
G: A-6BG1QC07
H: A-6BG1QC08
J: A-6BG1QC09
K: A-6BG1QC05S

# FIG. 24

| Item No. 見出番号 | Part No. 部品番号 | Mark 記号 | Description 部品名称 | | Req'd 個数 | Remarks : serial No. 備考：実施号車 |
|---|---|---|---|---|---|---|
| A1 | Z-1-21700-249-2 | | OIL COOLER ASSY | ｵｲﾙｸｰﾗｱｯｾﾝ | 1 | A,C,D,E,F,G,H,J,K<br>INC.1-10 |
| A2 | Z-1-21700-293-0 | | OIL COOLER ASSY | ｵｲﾙｸｰﾗｱｯｾﾝ | 1 | B<br>INC.1-10<br>-1995.8 |
| - | Z-1-21700-298-1 | | OIL COOLER ASSY | ｵｲﾙｸｰﾗｱｯｾﾝ | 1 | B<br>INC.1-10<br>1995.9- |
| K1 | Z-1-87811-031-5 | | ENGINE OVERHAUL REPAIR KIT | ｴﾝｼﾞﾝｵｰﾊﾞﾎｰﾙ ﾘﾍﾟｱｰｷｯﾄ | 1 | A<br>INC.11 & etc. |
| K2 | Z-1-87811-223-3 | | ENGINE OVERHAUL REPAIR KIT | ｴﾝｼﾞﾝｵｰﾊﾞﾎｰﾙ ﾘﾍﾟｱｰｷｯﾄ | 1 | B<br>INC.11 & etc. |
| K3 | Z-1-87811-628-3 | | ENGINE OVERHAUL REPAIR KIT | ｴﾝｼﾞﾝｵｰﾊﾞﾎｰﾙ ﾘﾍﾟｱｰｷｯﾄ | 1 | C,D,E,F,H,J,K<br>INC.11 & etc. |
| K4 | Z-1-87811-887-1 | | ENGINE OVERHAUL REPAIR KIT | ｴﾝｼﾞﾝｵｰﾊﾞﾎｰﾙ ﾘﾍﾟｱｰｷｯﾄ | 1 | G<br>INC.11 & etc. |
| 1 | Z-1-11282-018-0 | | ELEMENT | ｴﾚﾒﾝﾄ | 1 | A,C,D,E,F,G,H,J,K |
| - | Z-1-11282-025-0 | | ELEMENT | ｴﾚﾒﾝﾄ | 1 | B |
| 2 | Z-1-11282-014-0 | | GASKET | ｶﾞｽｹｯﾄ | 2 | A & C & D & E & F & G & H & J & K<br>-2000.11 |
| - | Z-1-11282-029-0 | | GASKET | ｶﾞｽｹｯﾄ | 2 | A & C & D & E & F & G & H & J & K<br>2000.12- |
| - | Z-1-11282-014-0 | | GASKET | ｶﾞｽｹｯﾄ | 2 | B<br>-2000.12 |
| - | Z-1-11282-029-0 | | GASKET | ｶﾞｽｹｯﾄ | 2 | B<br>2001.1- |
| 3 | Z-9-13263-010-0 | | PLUG | ﾌﾟﾗｸﾞ | 1 | |
| 4 | Z-9-0956-2215-0 | | GASKET | ｶﾞｽｹｯﾄ | 1 | |
| 5 | Z-5-09580-092-0 | | SPRING | ｽﾌﾟﾘﾝｸﾞ | 1 | |
| 6 | Z-5-11288-001-0 | | VALVE,BY-PASS | ﾊﾞﾙﾌﾞ | 1 | |
| 7 | Z-5-09605-017-0 | | PLUG | ﾌﾟﾗｸﾞ | 2 | |
| 8 | Z-9-0911-1410-0 | | NUT | ﾅｯﾄ | 4 | |
| 9 | Z-9-0916-4510-0 | | WASHER | ﾜｯｼｬ | 4 | |
| 10 | Z-1-11281-028-1 | | BODY | ﾎﾞﾃﾞｰ | 1 | A,C,D,E,F,G,H,J,K |
| - | Z-1-11281-036-0 | | BODY | ﾎﾞﾃﾞｰ | 1 | B<br>-1995.7 |
| - | Z-1-11281-037-0 | | BODY | ﾎﾞﾃﾞｰ | 1 | B<br>1995.8- |
| 11 | Z-1-11282-020-0 | * | PACKING | ﾊﾟｯｷﾝｸﾞ | 1 | -2000.12 |
| - | Z-1-11282-028-1 | * | PACKING | ﾊﾟｯｷﾝｸﾞ | 1 | 2001.1- |
| 12 | Z-8-94205-986-1 | | BOLT | ﾎﾞﾙﾄ | 1 | A,C,D,E,F,G,H,J,K |
| - | Z-0-5004-0870-0 | | BOLT | ﾎﾞﾙﾄ | 1 | B |
| 13 | Z-0-5014-0845-0 | | BOLT | ﾎﾞﾙﾄ | 12 | A,C,D,E,F,G,H,J,K |
| - | Z-0-5014-0828-0 | | BOLT | ﾎﾞﾙﾄ | 15 | A,C,D,E,F,G,H,J,K |
| - | Z-0-5014-0850-0 | | BOLT | ﾎﾞﾙﾄ | 12 | B<br>-1995.8 |
| - | Z-0-5014-0845-0 | | BOLT | ﾎﾞﾙﾄ | 12 | B<br>1995.9- |

## FIG. 24 OIL COOLER
オイルクーラ

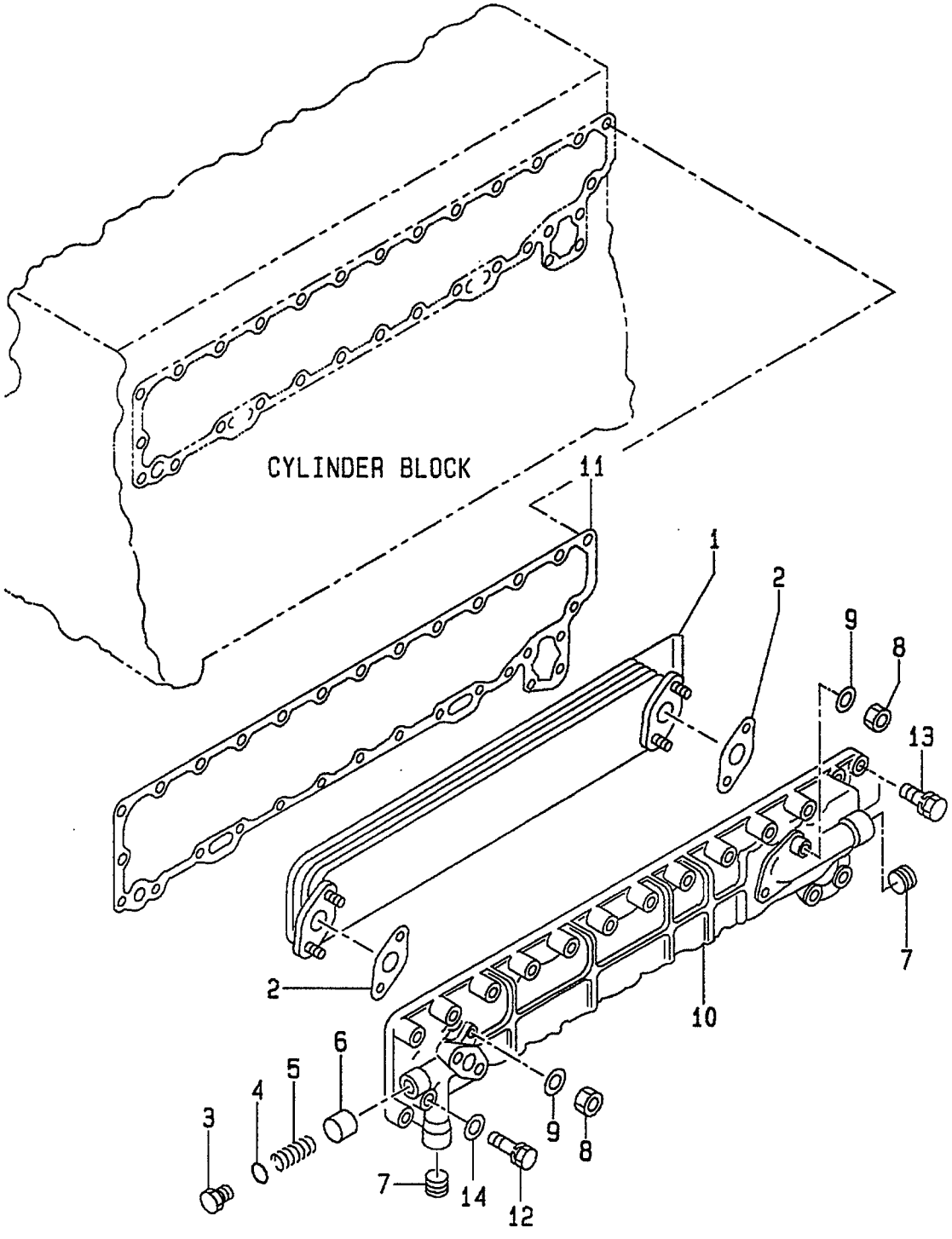

A: A-6BG1QC
B: A-6BG1TQC
C: A-6BG1QC02
D: A-6BG1QC03
E: A-6BG1QC05
F: A-6BG1QC06
G: A-6BG1QC07
H: A-6BG1QC08
J: A-6BG1QC09
K: A-6BG1QC05S

**FIG. 24**

| Item No. 見出番号 | Part No. 部品番号 | Mark 記号 | Description 部品名称 | Req'd 個数 | Remarks : serial No. 備考：実施号車 |
|---|---|---|---|---|---|
| 13 | Z-0-5014-0828-0 | | BOLT ﾎﾞﾙﾄ | 6 | B |
| - | Z-0-5014-0835-0 | | BOLT ﾎﾞﾙﾄ | 9 | B<br>-1995.8 |
| - | Z-0-5014-0828-0 | | BOLT ﾎﾞﾙﾄ | 9 | B<br>1995.9- |
| - | Z-1-09030-091-0 | | BOLT ﾎﾞﾙﾄ | 2 | |
| 14 | Z-9-0916-0508-0 | | WASHER ﾜｯｼｬ | 1 | |

## FIG. 25 INJECTION PIPING
ｲﾝｼﾞｪｸｼｮﾝﾊﾟｲﾋﾟﾝｸﾞ

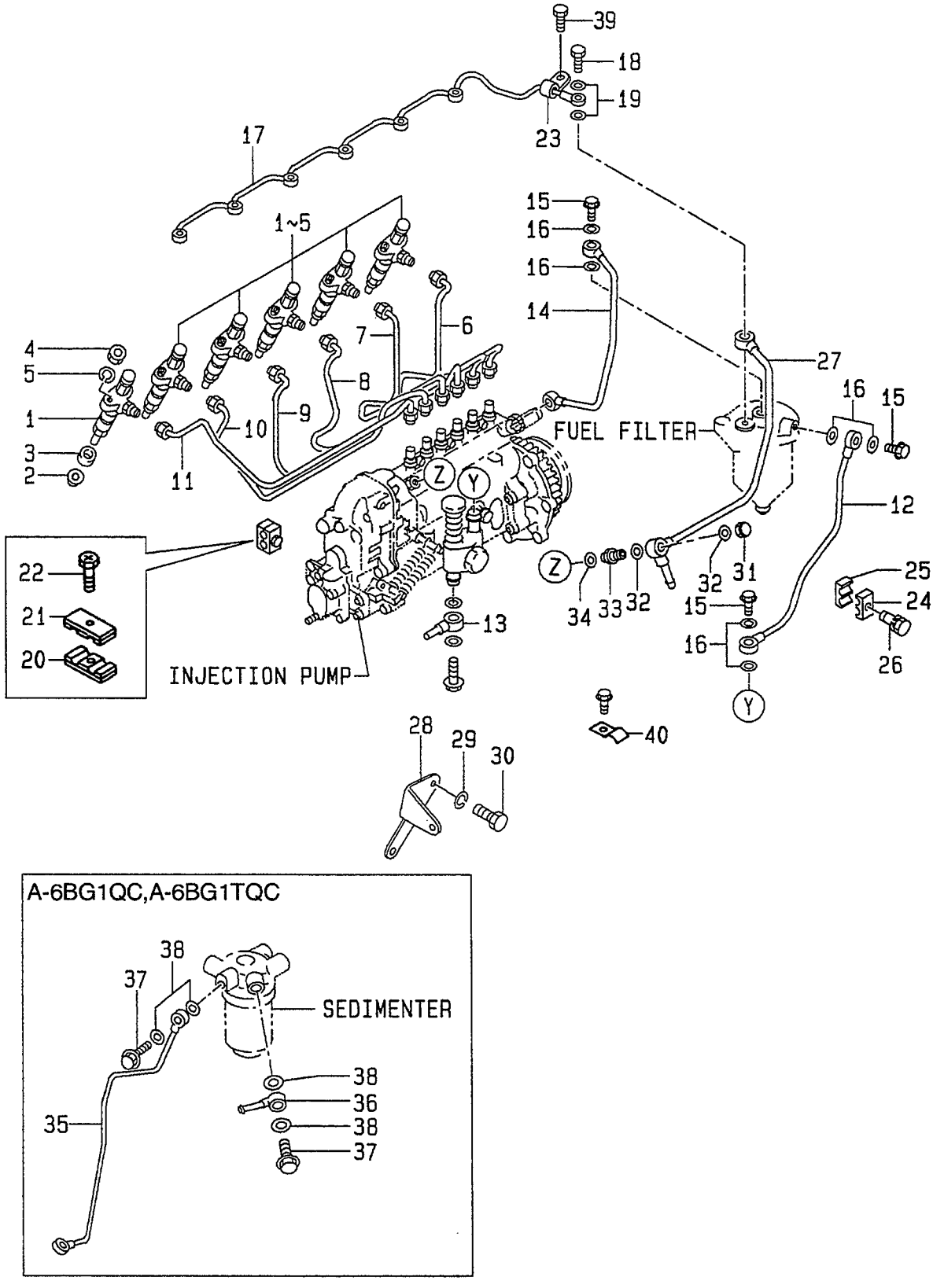

A: A-6BG1QC
B: A-6BG1TQC
C: A-6BG1QC02
D: A-6BG1QC03
E: A-6BG1QC05
F: A-6BG1QC06
G: A-6BG1QC07
H: A-6BG1QC08
J: A-6BG1QC09
K: A-6BG1QC05S

# FIG. 25

| Item No. 見出番号 | Part No. 部品番号 | Mark 記号 | Description 部品名称 | | Req'd 個数 | Remarks : serial No. 備考：実施号車 |
|---|---|---|---|---|---|---|
| K1 | Z-1-87811-031-5 | | ENGINE OVERHAUL REPAIR KIT | ｴﾝｼﾞﾝｵｰﾊﾞﾎｰﾙ ﾘﾍﾟｱｰｷｯﾄ | 1 | A INC.2,16,19 & etc. |
| K2 | Z-1-87811-223-3 | | ENGINE OVERHAUL REPAIR KIT | ｴﾝｼﾞﾝｵｰﾊﾞﾎｰﾙ ﾘﾍﾟｱｰｷｯﾄ | 1 | B INC.2,16,19 & etc. |
| K3 | Z-1-87811-628-3 | | ENGINE OVERHAUL REPAIR KIT | ｴﾝｼﾞﾝｵｰﾊﾞﾎｰﾙ ﾘﾍﾟｱｰｷｯﾄ | 1 | C,D,E,F,H,J,K INC.2,16,19 & etc. |
| K4 | Z-1-87811-887-1 | | ENGINE OVERHAUL REPAIR KIT | ｴﾝｼﾞﾝｵｰﾊﾞﾎｰﾙ ﾘﾍﾟｱｰｷｯﾄ | 1 | G INC.2,16,19 & etc. |
| 1 | Z-1-15300-291-2 | | NOZZLE | ﾉｽﾞﾙ | 6 | A SEE FIG.28 |
| - | Z-1-15300-331-0 | | NOZZLE | ﾉｽﾞﾙ | 6 | B SEE FIG.28 |
| - | Z-1-15300-375-0 | | NOZZLE | ﾉｽﾞﾙ | 6 | C,D,J SEE FIG.28 |
| - | Z-8-97030-285-1 | | NOZZLE | ﾉｽﾞﾙ | 6 | E,F,G,H,K SEE FIG.28 |
| 2 | Z-5-15315-003-0 | * | PACKING | ﾊﾟｯｷﾝｸﾞ | 6 | |
| 3 | Z-9-15339-051-0 | | COVER,DUST | ｶﾊﾞｰ | 6 | |
| 4 | Z-9-0911-0408-0 | | NUT | ﾅｯﾄ | 12 | |
| 5 | Z-9-0915-0508-0 | | WASHER | ﾜｯｼｬ | 12 | |
| 6 | Z-1-15415-183-1 | | PIPE,NO.1 | ﾊﾟｲﾌﾟ | 1 | A,C,D,E,F,G,H,J,K |
| - | Z-1-15415-847-0 | | PIPE,NO.1 | ﾊﾟｲﾌﾟ | 1 | B |
| 7 | Z-1-15415-184-1 | | PIPE,NO.2 | ﾊﾟｲﾌﾟ | 1 | A,C,D,E,F,G,H,J,K |
| - | Z-1-15415-848-0 | | PIPE,NO.2 | ﾊﾟｲﾌﾟ | 1 | B |
| 8 | Z-1-15415-185-1 | | PIPE,NO.3 | ﾊﾟｲﾌﾟ | 1 | A,C,D,E,F,G,H,J,K |
| - | Z-1-15415-849-0 | | PIPE,NO.3 | ﾊﾟｲﾌﾟ | 1 | B |
| 9 | Z-1-15415-186-1 | | PIPE,NO.4 | ﾊﾟｲﾌﾟ | 1 | A,C,D,E,F,G,H,J,K |
| - | Z-1-15415-850-0 | | PIPE,NO.4 | ﾊﾟｲﾌﾟ | 1 | B |
| 10 | Z-1-15415-187-1 | | PIPE,NO.5 | ﾊﾟｲﾌﾟ | 1 | A,C,D,E,F,G,H,J,K |
| - | Z-1-15415-851-1 | | PIPE,NO.5 | ﾊﾟｲﾌﾟ | 1 | B |
| 11 | Z-1-15415-188-1 | | PIPE,NO.6 | ﾊﾟｲﾌﾟ | 1 | A,C,D,E,F,G,H,J,K |
| - | Z-1-15415-852-1 | | PIPE,NO.6 | ﾊﾟｲﾌﾟ | 1 | B |
| 12 | Z-1-15414-294-0 | | PIPE | ﾊﾟｲﾌﾟ | 1 | A,C,D,E,F,G,H,J,K |
| - | Z-1-15415-844-0 | | PIPE | ﾊﾟｲﾌﾟ | 1 | B |
| 13 | Z-5-15411-223-1 | | JOINT,EYE | ｼﾞｮｲﾝﾄ | 1 | C,D,E,F,G,H,J,K |
| 14 | Z-1-15414-295-0 | | PIPE | ﾊﾟｲﾌﾟ | 1 | A,C,D,E,F,G,H,J,K |
| - | Z-1-15415-845-0 | | PIPE | ﾊﾟｲﾌﾟ | 1 | B |
| 15 | Z-1-09675-086-0 | | BOLT,EYE | ﾎﾞﾙﾄ | 4 | |
| 16 | Z-1-09630-085-0 | * | PACKING | ﾊﾟｯｷﾝｸﾞ | 8 | |
| 17 | Z-1-15412-471-1 | | PIPE | ﾊﾟｲﾌﾟ | 1 | |
| 18 | Z-1-09675-037-1 | | BOLT,EYE | ﾎﾞﾙﾄ | 1 | |
| 19 | Z-1-09630-082-0 | * | PACKING | ﾊﾟｯｷﾝｸﾞ | 2 | |
| A | Z-9-15419-612-0 | | CLIP ASSY | ｸﾘｯﾌﾟｱｯｾﾝ | 6 | INC.20-22 |
| 20 | Z-9-15419-613-0 | | CLIP | ｸﾘｯﾌﾟ | 6 | |
| 21 | Z-9-15419-614-0 | | CLIP | ｸﾘｯﾌﾟ | 6 | |
| 22 | Z-9-09802-539-0 | | BOLT | ﾎﾞﾙﾄ | 6 | |
| 23 | Z-9-0952-4555-0 | | CLIP | ｸﾘｯﾌﾟ | 1 | |
| 24 | Z-5-09709-103-0 | | CLIP | ｸﾘｯﾌﾟ | 2 | A,C,D,E,F,G,H,J,K |
| - | Z-5-09709-103-0 | | CLIP | ｸﾘｯﾌﾟ | 1 | B |
| 25 | Z-5-09709-104-0 | | CLIP | ｸﾘｯﾌﾟ | 2 | A,C,D,E,F,G,H,J,K |

## FIG. 25 INJECTION PIPING
ｲﾝｼﾞｪｸｼｮﾝﾊﾟｲﾋﾟﾝｸﾞ

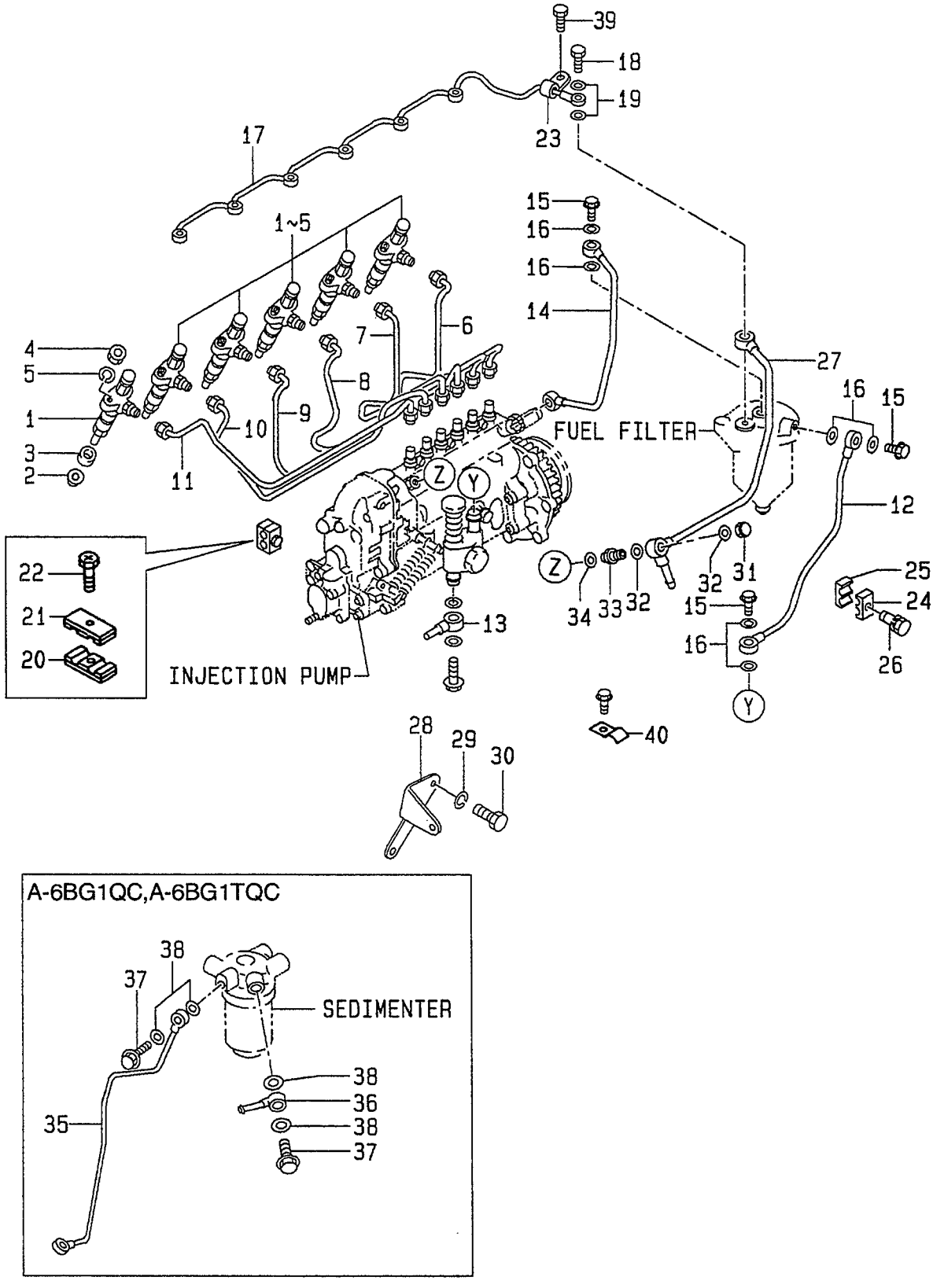

A: A-6BG1QC
B: A-6BG1TQC
C: A-6BG1QC02
D: A-6BG1QC03
E: A-6BG1QC05
F: A-6BG1QC06
G: A-6BG1QC07
H: A-6BG1QC08
J: A-6BG1QC09
K: A-6BG1QC05S

**FIG. 25**

| Item No. 見出番号 | Part No. 部品番号 | Mark 記号 | Description 部品名称 | | Req'd 個数 | Remarks : serial No. 備考：実施号車 |
|---|---|---|---|---|---|---|
| 25 | Z-5-09709-104-0 | | CLIP | ｸﾘｯﾌﾟ | 1 | B |
| 26 | Z-0-5004-0630-0 | | BOLT | ﾎﾞﾙﾄ | 1 | |
| 27 | Z-1-15414-296-2 | | PIPE | ﾊﾟｲﾌﾟ | 1 | A,C,D,E,F,G,H,J,K |
| - | Z-1-15415-846-0 | | PIPE | ﾊﾟｲﾌﾟ | 1 | B |
| 28 | Z-5-15419-001-0 | | BRACKET | ﾌﾞﾗｹｯﾄ | 1 | A,B |
| 29 | Z-9-0915-0510-0 | | WASHER | ﾜｯｼｬ | 1 | A<br>-1997.1 |
| 30 | Z-0-2080-1020-0 | | BOLT | ﾎﾞﾙﾄ | 1 | A<br>-1997.1 |
| - | Z-0-2868-1020-0 | | BOLT | ﾎﾞﾙﾄ | 1 | A<br>1997.2- |
| 31 | Z-1-09468-002-1 | | NUT | ﾅｯﾄ | 1 | |
| 32 | Z-1-09630-085-0 | | PACKING | ﾊﾟｯｷﾝｸﾞ | 2 | |
| 33 | Z-1-13260-001-1 | | VALVE,OVER FLOW | ﾊﾞﾙﾌﾞ | 1 | |
| 34 | Z-1-09630-085-0 | | PACKING | ﾊﾟｯｷﾝｸﾞ | 1 | |
| 35 | Z-1-15415-810-2 | | PIPE | ﾊﾟｲﾌﾟ | 1 | A |
| - | Z-1-15415-884-0 | | PIPE | ﾊﾟｲﾌﾟ | 1 | B |
| 36 | Z-5-15411-223-1 | | JOINT,EYE | ｼﾞｮｲﾝﾄ | 1 | A,B |
| 37 | Z-1-09675-086-0 | | BOLT,EYE | ﾎﾞﾙﾄ | 1 | A,B |
| - | Z-1-09675-063-0 | | BOLT,EYE | ﾎﾞﾙﾄ | 1 | A,B |
| 38 | Z-1-09630-085-0 | | PACKING | ﾊﾟｯｷﾝｸﾞ | 4 | A,B |
| 39 | Z-0-5004-0630-0 | | BOLT | ﾎﾞﾙﾄ | 1 | |
| 40 | Z-5-09709-104-0 | | CLIP | ｸﾘｯﾌﾟ | 2 | A & C & D & E & F & G & H & J & K<br>2001.1- |
| 41 | Z-0-5004-0630-0 | + | BOLT | ﾎﾞﾙﾄ | 1 | B |

## FIG. 26 FUEL FILTER
フューエルフィルタ

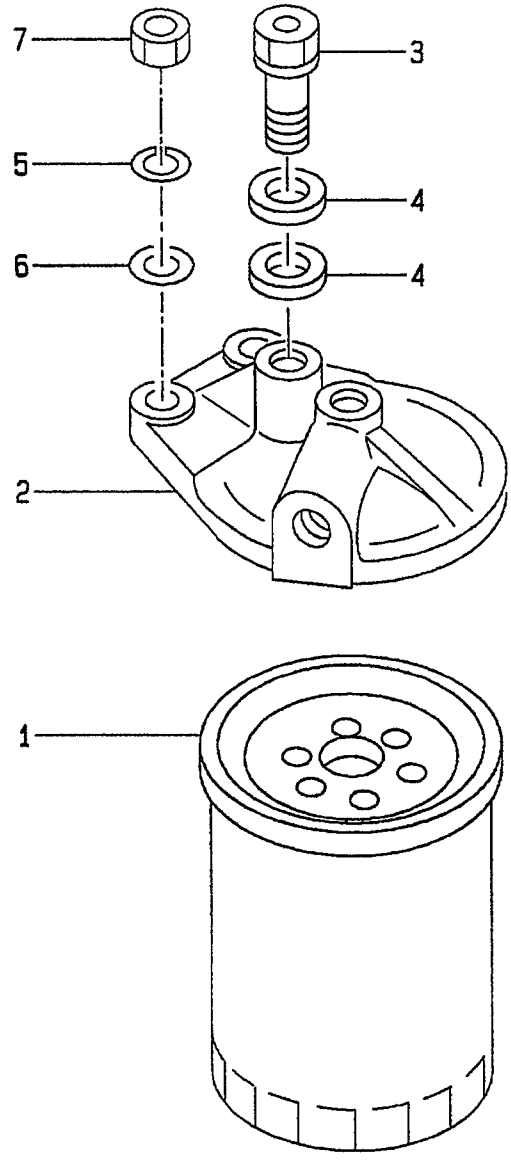

A: A-6BG1QC
B: A-6BG1TQC
C: A-6BG1QC02
D: A-6BG1QC03
E: A-6BG1QC05
F: A-6BG1QC06
G: A-6BG1QC07
H: A-6BG1QC08
J: A-6BG1QC09
K: A-6BG1QC05S

**FIG. 26**

| Item No. 見出番号 | Part No. 部品番号 | Mark 記号 | Description 部品名称 | | Req'd 個数 | Remarks : serial No. 備考：実施号車 |
|---|---|---|---|---|---|---|
| A1 | Z-1-13200-702-1 | | FUEL FILTER ASSY | ﾌｭｰｴﾙﾌｨﾙﾀｱｯｾﾝ | 1 | A & B<br>-2000.6<br>INC.1-4 |
| - | Z-1-13200-701-2 | | FUEL FILTER ASSY | ﾌｭｰｴﾙﾌｨﾙﾀｱｯｾﾝ | 1 | A & B<br>2000.7-<br>INC.1-4 |
| A2 | Z-1-13200-701-2 | | FUEL FILTER ASSY | ﾌｭｰｴﾙﾌｨﾙﾀｱｯｾﾝ | 1 | C,D,E,F,G,H,J,K<br>INC.1-4 |
| 1 | 20801-02171 | | ELEMENT,FUEL | ｴﾚﾒﾝﾄ | 1 | |
| 2 | Z-1-13212-087-1 | | COVER | ｶﾊﾞｰ | 1 | |
| 3 | Z-1-13260-047-0 | | VALVE,OVER FLOW | ﾊﾞﾙﾌﾞ | 1 | |
| 4 | Z-1-09630-085-0 | | PACKING | ﾊﾟｯｷﾝｸﾞ | 2 | |
| 5 | Z-9-0915-0510-0 | | WASHER | ﾜｯｼｬ | 2 | |
| 6 | Z-9-0916-0510-0 | | WASHER | ﾜｯｼｬ | 2 | |
| 7 | Z-9-0911-0410-0 | | NUT | ﾅｯﾄ | 2 | |

## FIG. 27 SEDIMENTER (A,B)
セジメンタ

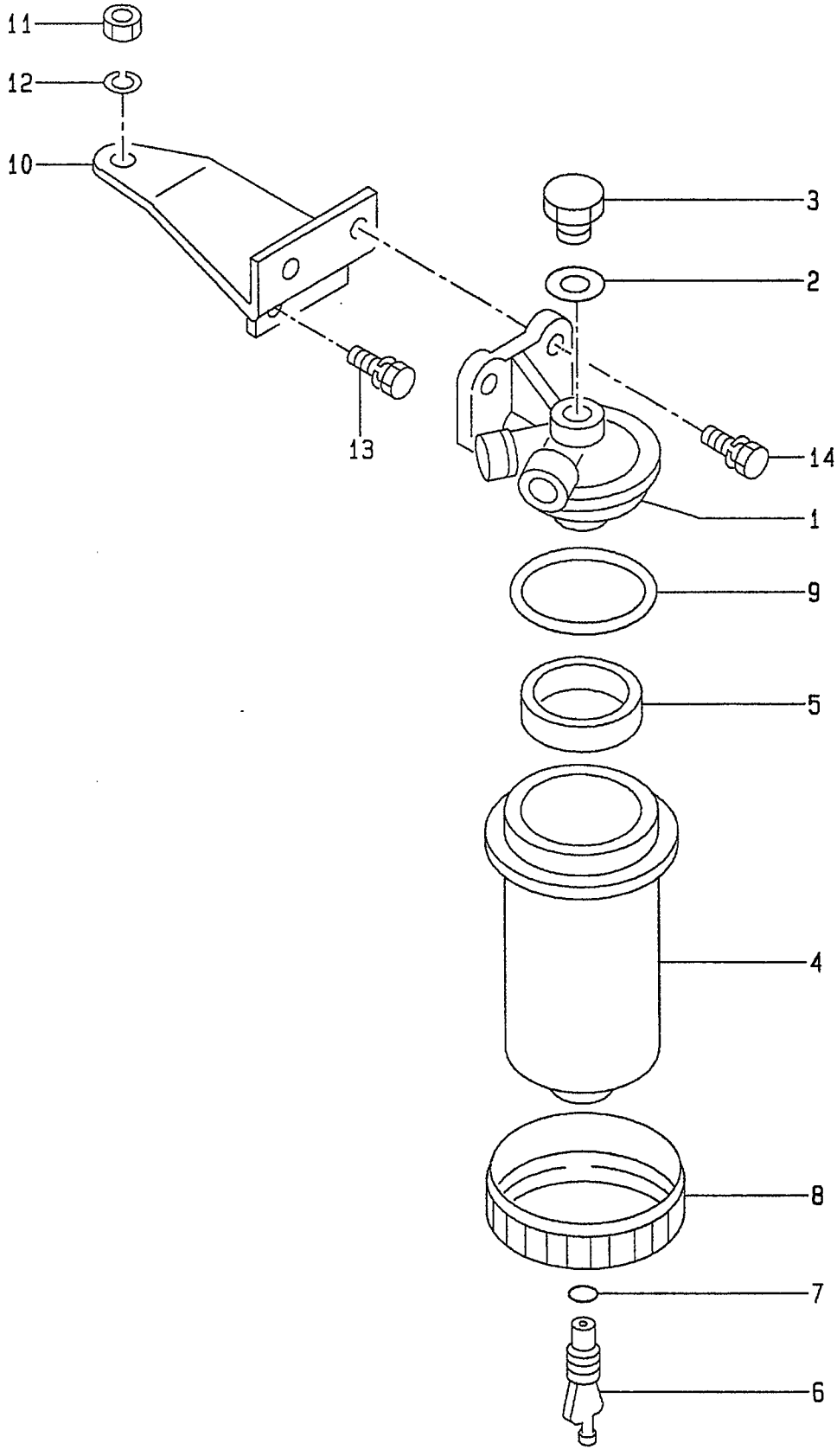

A: A-6BG1QC
B: A-6BG1TQC
C: A-6BG1QC02
D: A-6BG1QC03
E: A-6BG1QC05
F: A-6BG1QC06
G: A-6BG1QC07
H: A-6BG1QC08
J: A-6BG1QC09
K: A-6BG1QC05S

**FIG. 27**

| Item No. 見出番号 | Part No. 部品番号 | Mark 記号 | Description 部品名称 | | Req'd 個数 | Remarks : serial No. 備考：実施号車 |
|---|---|---|---|---|---|---|
| A | Z-1-13200-841-0 | | SEDIMENTER ASSY | ｾｼﾞﾒﾝﾀｱｯｾﾝ | 1 | A,B<br>INC.1-9 |
| 1 | Z-1-13212-140-1 | | COVER | ｶﾊﾞｰ | 1 | A,B<br>INC.2,3 |
| 2 | Z-5-09630-024-0 | | PACKING | ﾊﾟｯｷﾝｸﾞ | 1 | A,B |
| 3 | Z-5-13219-020-0 | | PLUG | ﾌﾟﾗｸﾞ | 1 | A,B |
| 4 | Z-1-13211-211-0 | | CASE | ｹｰｽ | 1 | A,B |
| 5 | Z-5-13219-021-0 | | FLOAT | ﾌﾛｰﾄ | 1 | A,B |
| 6 | Z-8-94453-746-0 | | PLUG | ﾌﾟﾗｸﾞ | 1 | A,B<br>INC.7 |
| 7 | Z-8-94416-377-0 | | PACKING | ﾊﾟｯｷﾝｸﾞ | 1 | A,B |
| 8 | Z-5-13619-022-1 | | RING,RETAINER | ﾘﾝｸﾞ | 1 | A,B |
| 9 | Z-5-09623-070-0 | | O RING | Oﾘﾝｸﾞ | 1 | A,B |
| 10 | Z-1-19755-094-1 | | BRACKET | ﾌﾞﾗｹｯﾄ | 1 | A,B |
| 11 | Z-9-0911-0510-0 | | NUT | ﾅｯﾄ | 1 | A,B |
| 12 | Z-9-0915-0510-0 | | WASHER | ﾜｯｼｬ | 1 | A,B |
| 13 | Z-0-5014-0818-0 | | BOLT | ﾎﾞﾙﾄ | 2 | A & B<br>-1997.7 |
| - | Z-0-2808-0816-0 | | BOLT | ﾎﾞﾙﾄ | 2 | A & B<br>1997.8- |
| 14 | Z-0-5014-0825-0 | | BOLT | ﾎﾞﾙﾄ | 2 | A & B<br>-1997.7 |
| - | Z-0-2808-0825-0 | | BOLT | ﾎﾞﾙﾄ | 2 | A & B<br>1997.8- |

## FIG. 28 NOZZLE & NOZZLE HOLDER
ﾉｽﾞﾙ&ﾉｽﾞﾙﾎﾙﾀﾞ

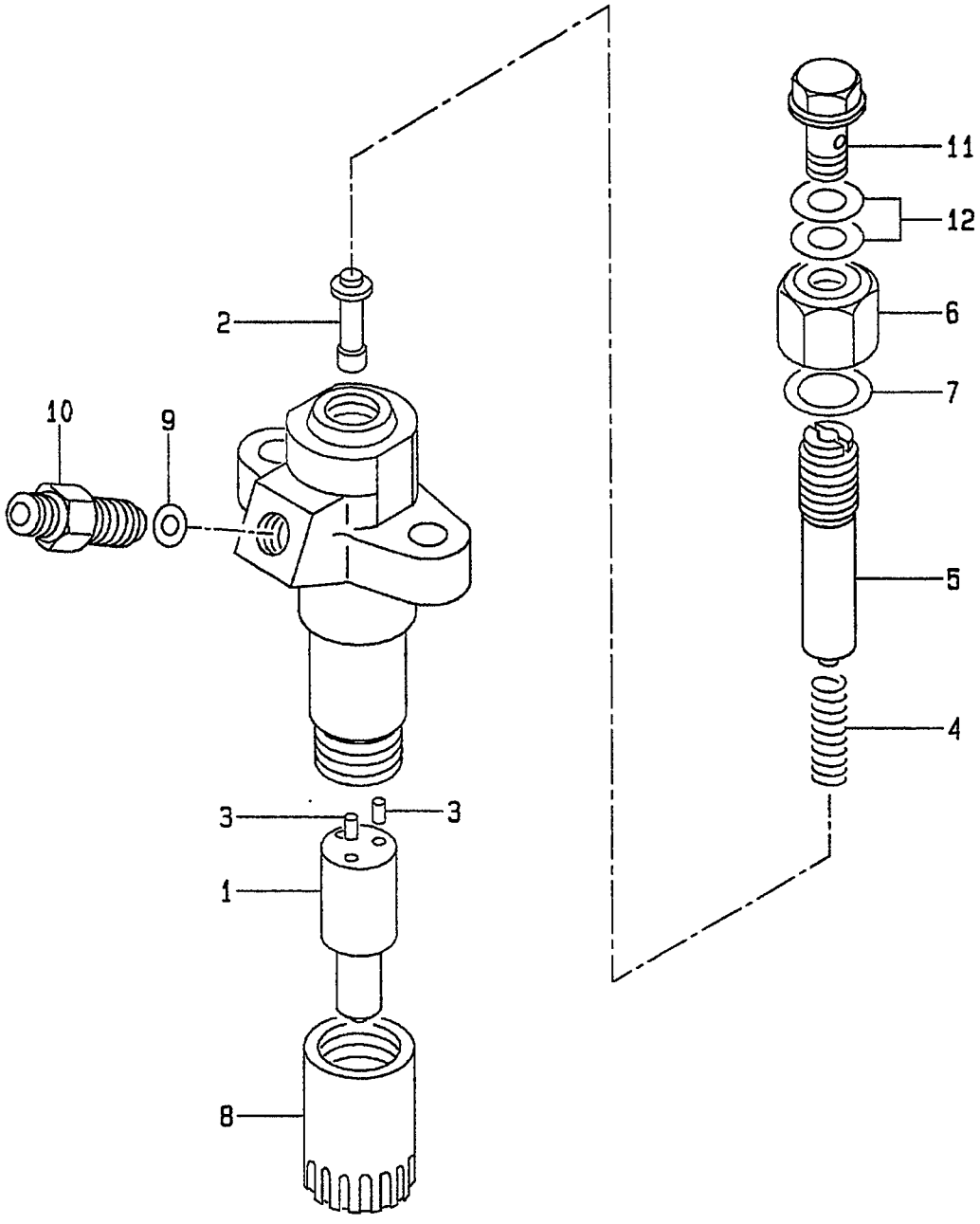

A: A-6BG1QC
B: A-6BG1TQC
C: A-6BG1QC02
D: A-6BG1QC03
E: A-6BG1QC05
F: A-6BG1QC06
G: A-6BG1QC07
H: A-6BG1QC08
J: A-6BG1QC09
K: A-6BG1QC05S

**FIG. 28**

| Item No. 見出番号 | Part No. 部品番号 | Mark 記号 | Description 部品名称 | | Req'd 個数 | Remarks : serial No. 備考：実施号車 |
|---|---|---|---|---|---|---|
| A1 | Z-1-15300-291-2 | | INJECTION NOZZLE ASSY | ｲﾝｼﾞｪｸｼｮﾝﾉｽﾞﾙ ｱｯｾﾝ | 6 | A INC.1-12 |
| A2 | Z-1-15300-331-0 | | INJECTION NOZZLE ASSY | ｲﾝｼﾞｪｸｼｮﾝﾉｽﾞﾙ ｱｯｾﾝ | 6 | B INC.1-12 |
| A3 | Z-1-15300-375-0 | | INJECTION NOZZLE ASSY | ｲﾝｼﾞｪｸｼｮﾝﾉｽﾞﾙ ｱｯｾﾝ | 6 | C,D,J INC.1-12 |
| A4 | Z-8-97030-285-1 | | INJECTION NOZZLE ASSY | ｲﾝｼﾞｪｸｼｮﾝﾉｽﾞﾙ ｱｯｾﾝ | 6 | E,F,G,H,K INC.1-12 |
| 1 | Z-5-15311-027-0 | | NOZZLE | ﾉｽﾞﾙ | 6 | A,C,D,J |
| - | Z-1-15311-263-0 | | NOZZLE | ﾉｽﾞﾙ | 6 | B |
| - | Z-5-15311-019-1 | | NOZZLE | ﾉｽﾞﾙ | 6 | E,F,G,H,K |
| A5 | Z-8-97016-147-1 | | HOLDER ASSY | ﾎﾙﾀﾞｱｯｾﾝ | 6 | A & B & C & D & J INC.2-12 |
| - | Z-8-97016-147-1 | | HOLDER ASSY | ﾎﾙﾀﾞｱｯｾﾝ | 6 | E & F & G & H & K -1998.6 INC.2-12 |
| - | Z-8-97022-098-0 | | HOLDER ASSY | ﾎﾙﾀﾞｱｯｾﾝ | 6 | E & F & G & H & K 1998.7- INC.2-12 |
| 2 | Z-8-94169-502-0 | | ROD,PUSH | ﾛｯﾄﾞ | 6 | |
| 3 | Z-9-15347-003-0 | | PIN,HOLDER | ﾋﾟﾝ | 12 | |
| 4 | Z-5-15343-005-0 | | SPRING | ｽﾌﾟﾘﾝｸﾞ | 6 | |
| 5 | Z-8-94169-503-0 | | SCREW | ｽｸﾘｭ | 6 | |
| 6 | Z-5-15332-006-0 | | NUT,CAP | ﾅｯﾄ | 6 | |
| 7 | Z-5-15339-060-0 | | GASKET | ｶﾞｽｹｯﾄ | 6 | |
| 8 | Z-1-15332-017-0 | | NUT | ﾅｯﾄ | 6 | |
| 9 | Z-5-51339-003-0 | | GASKET | ｶﾞｽｹｯﾄ | 6 | |
| 10 | Z-8-94320-308-0 | | CONNECTOR | ｺﾈｸﾀ | 6 | |
| 11 | Z-1-15339-009-0 | | BOLT,EYE | ﾎﾞﾙﾄ | 6 | A,B,C,D,J |
| - | Z-1-15339-009-0 | | BOLT,EYE | ﾎﾞﾙﾄ | 6 | E & F & G & H & K -1998.6 |
| - | Z-1-09675-037-1 | | BOLT,EYE | ﾎﾞﾙﾄ | 6 | E & F & G & H & K 1998.7- |
| 12 | Z-1-15339-010-0 | | PACKING | ﾊﾟｯｷﾝｸﾞ | 12 | A & B & C & D & J |
| - | Z-1-15339-010-0 | | PACKING | ﾊﾟｯｷﾝｸﾞ | 12 | E & F & G & H & K -1998.6 |
| - | Z-1-09630-082-0 | | PACKING | ﾊﾟｯｷﾝｸﾞ | 12 | E & F & G & H & K 1998.7- |

# FIG. 29 INJECTION PUMP MOUNT (A,B,C,D,J)
インジェクションポンプマウント

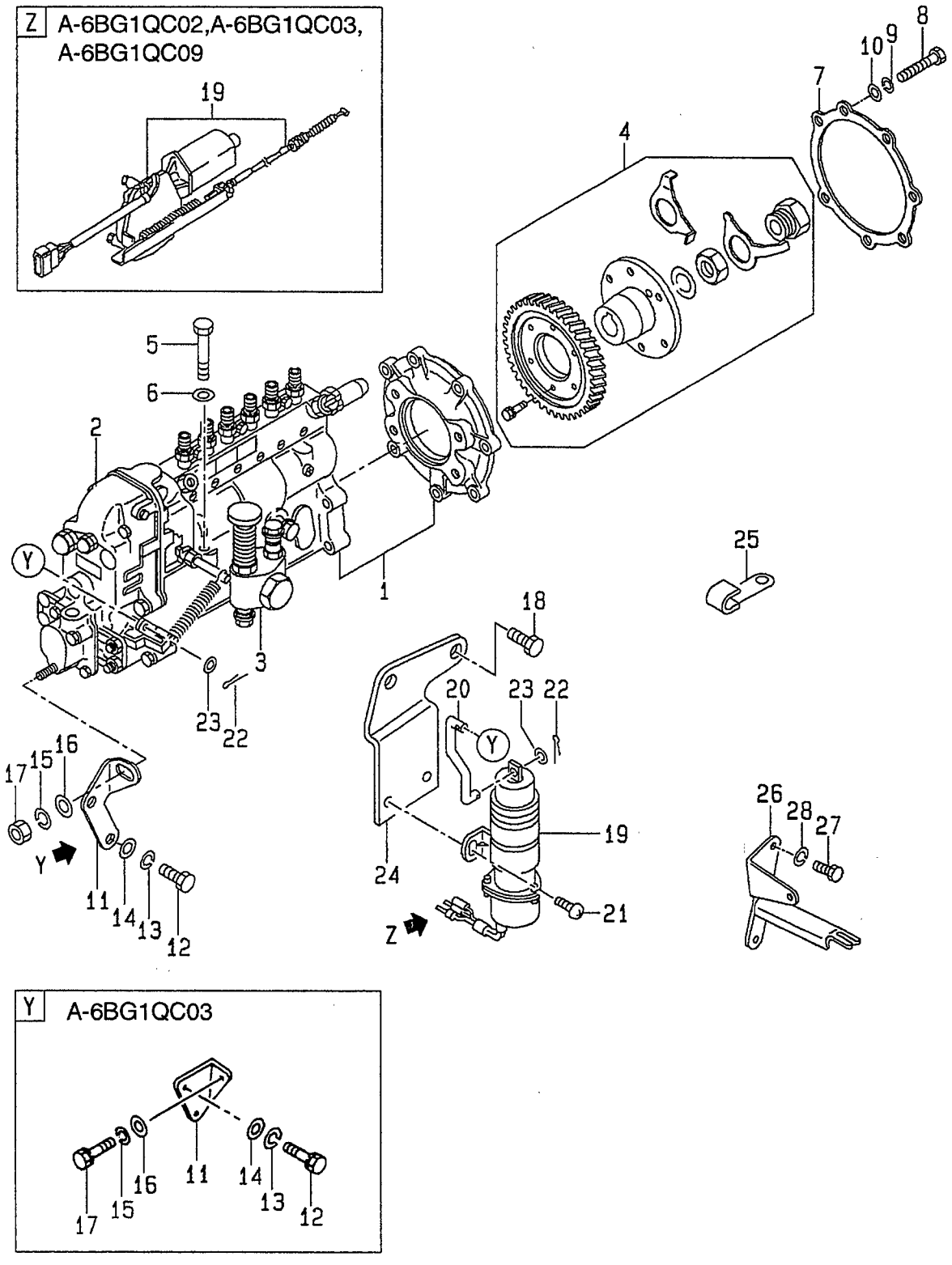

A: A-6BG1QC
B: A-6BG1TQC
C: A-6BG1QC02
D: A-6BG1QC03
E: A-6BG1QC05
F: A-6BG1QC06
G: A-6BG1QC07
H: A-6BG1QC08
J: A-6BG1QC09
K: A-6BG1QC05S

# FIG. 29

| Item No. 見出番号 | Part No. 部品番号 | Mark 記号 | Description 部品名称 | | Req'd 個数 | Remarks : serial No. 備考：実施号車 |
|---|---|---|---|---|---|---|
| A1 | Z-1-15602-969-0 | | INJECTION PUMP ASSY | ｲﾝｼﾞｪｸｼｮﾝﾎﾟﾝﾌﾟ ｱｯｾﾝ | 1 | A<br>INC.1-4 |
| A2 | Z-1-15603-040-0 | | INJECTION PUMP ASSY | ｲﾝｼﾞｪｸｼｮﾝﾎﾟﾝﾌﾟ ｱｯｾﾝ | 1 | B<br>INC.1-4 |
| A3 | Z-1-15603-260-0 | | INJECTION PUMP ASSY | ｲﾝｼﾞｪｸｼｮﾝﾎﾟﾝﾌﾟ ｱｯｾﾝ | 1 | C,J<br>INC.1-4 |
| A4 | Z-1-15603-261-0 | | INJECTION PUMP ASSY | ｲﾝｼﾞｪｸｼｮﾝﾎﾟﾝﾌﾟ ｱｯｾﾝ | 1 | D(FD70Z8, FD80Z8)<br>INC.1-4 |
| - | Z-1-15603-261-0 | | INJECTION PUMP ASSY | ｲﾝｼﾞｪｸｼｮﾝﾎﾟﾝﾌﾟ ｱｯｾﾝ | 1 | D(FD100Z8) : E NO.-1393<br>INC.1-4 |
| - | Z-1-15603-301-0 | | INJECTION PUMP ASSY | ｲﾝｼﾞｪｸｼｮﾝﾎﾟﾝﾌﾟ ｱｯｾﾝ | 1 | D(FD100Z8) : E NO.1394-<br>INC.1-4 |
| 1 | NO PART NO. | | INJECTION PUMP | ｲﾝｼﾞｪｸｼｮﾝﾎﾟﾝﾌﾟ | 1 | A,B,C,D,J<br>SEE FIG.31 |
| 2 | Z-1-15770-870-0 | | GOVERNOR | ｶﾞﾊﾞﾅ | 1 | A<br>SEE FIG.32 |
| - | Z-1-15730-009-0 | | GOVERNOR | ｶﾞﾊﾞﾅ | 1 | B<br>SEE FIG.32 |
| - | Z-1-15730-041-0 | | GOVERNOR | ｶﾞﾊﾞﾅ | 1 | C,J<br>SEE FIG.32 |
| - | Z-1-15730-042-0 | | GOVERNOR | ｶﾞﾊﾞﾅ | 1 | D(FD70Z8, FD80Z8)<br>SEE FIG.32 |
| - | Z-1-15730-042-0 | | GOVERNOR | ｶﾞﾊﾞﾅ | 1 | D(FD100Z8) : E NO.-1393<br>SEE FIG.32 |
| - | Z-1-15730-055-0 | | GOVERNOR | ｶﾞﾊﾞﾅ | 1 | D(FD100Z8) : E NO.1394-<br>SEE FIG.32 |
| 3 | Z-1-15750-162-0 | | FEED PUMP | ﾌｨｰﾄﾞﾎﾟﾝﾌﾟ | 1 | A,C,D,J<br>SEE FIG.33 |
| - | Z-1-15750-154-0 | | FEED PUMP | ﾌｨｰﾄﾞﾎﾟﾝﾌﾟ | 1 | B<br>SEE FIG.33 |
| 4 | Z-1-15780-172-0 | | COUPLING | ｶｯﾌﾟﾘﾝｸﾞ | 1 | A,C,D,J<br>SEE FIG.34 |
| - | Z-1-15780-168-0 | | COUPLING | ｶｯﾌﾟﾘﾝｸﾞ | 1 | B<br>SEE FIG.34 |
| 5 | Z-0-1081-0875-0 | | BOLT | ﾎﾞﾙﾄ | 4 | A |
| 6 | Z-9-09851-934-0 | | WASHER | ﾜｯｼｬ | 4 | A |
| 7 | Z-8-94370-675-0 | | PACKING | ﾊﾟｯｷﾝｸﾞ | 1 | A,B,C,D,J |
| 8 | Z-0-1081-0860-0 | | BOLT | ﾎﾞﾙﾄ | 7 | A & B & C & D & J<br>-1999.3 |
| - | Z-0-1080-5860-0 | | BOLT | ﾎﾞﾙﾄ | 7 | A & B & C & D & J<br>1999.4- |
| 9 | Z-9-0915-0508-0 | | WASHER | ﾜｯｼｬ | 7 | A,B,C,D,J |
| 10 | Z-9-0916-0508-0 | | WASHER | ﾜｯｼｬ | 7 | A,B,C,D,J |
| 11 | Z-5-19751-004-2 | | BRACKET | ﾌﾞﾗｹｯﾄ | 1 | A,B,C,J |
| - | Z-1-19751-120-0 | | BRACKET | ﾌﾞﾗｹｯﾄ | 1 | D |
| 12 | Z-0-5004-1020-0 | | BOLT | ﾎﾞﾙﾄ | 2 | A,B,C,D,J |
| 13 | Z-9-0915-0510-0 | | WASHER | ﾜｯｼｬ | 2 | A,B,C,D,J |
| 14 | Z-9-0916-0710-0 | | WASHER | ﾜｯｼｬ | 2 | A,B,C,D,J |
| 15 | Z-9-0915-0510-0 | | WASHER | ﾜｯｼｬ | 1 | A,B,C,D,J |
| 16 | Z-9-0916-0710-0 | | WASHER | ﾜｯｼｬ | 1 | A,B,C,J |

# FIG. 29 INJECTION PUMP MOUNT (A,B,C,D,J)
インジェクションポンプマウント

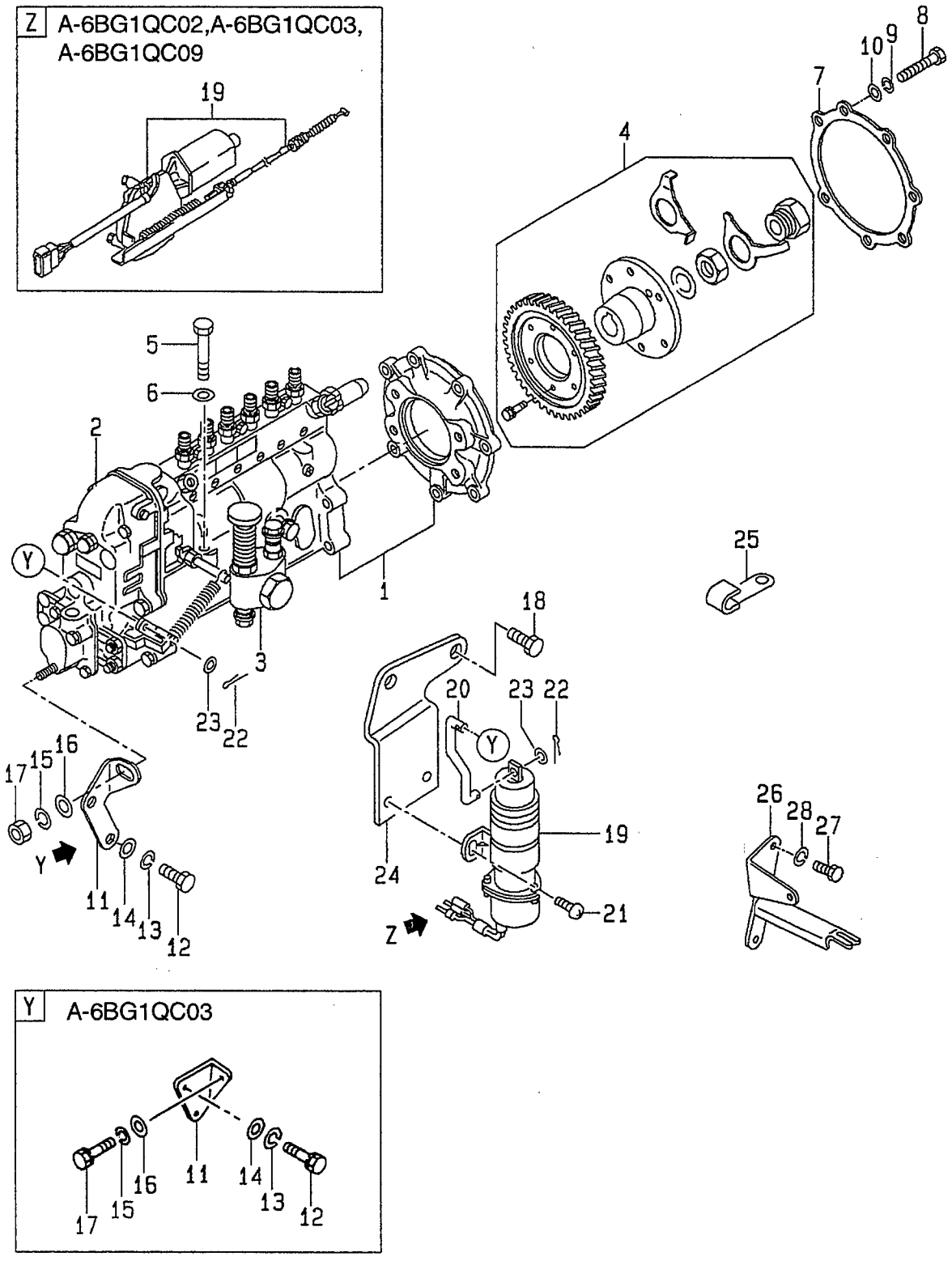

A: A-6BG1QC
B: A-6BG1TQC
C: A-6BG1QC02
D: A-6BG1QC03
E: A-6BG1QC05
F: A-6BG1QC06
G: A-6BG1QC07
H: A-6BG1QC08
J: A-6BG1QC09
K: A-6BG1QC05S

**FIG. 29**

| Item No. 見出番号 | Part No. 部品番号 | Mark 記号 | Description 部品名称 | | Req'd 個数 | Remarks : serial No. 備考：実施号車 |
|---|---|---|---|---|---|---|
| 16 | Z-9-0916-0710-0 | | WASHER | ﾜｯｼｬ | 3 | A<br>1995.5-1996.8 |
| - | Z-9-0916-0710-0 | | WASHER | ﾜｯｼｬ | 2 | D |
| 17 | Z-9-0911-0410-0 | | NUT | ﾅｯﾄ | 1 | A,B,C,J |
| 17 | Z-0-5004-1025-0 | | BOLT | ﾎﾞﾙﾄ | 1 | D |
| 18 | Z-0-5004-1020-0 | | BOLT | ﾎﾞﾙﾄ | 2 | A & B<br>-1997.7 |
| - | Z-0-2808-1020-0 | | BOLT | ﾎﾞﾙﾄ | 2 | A & B<br>1997.8- |
| 19 | Z-1-81910-052-0 | | VALVE,SOLENOID | ﾊﾞﾙﾌﾞ | 1 | A,B |
| - | Z-1-81900-137-2 | | STOP,ENGINE | ｽﾄｯﾌﾟ | 1 | C,D,J |
| 20 | Z-1-23314-122-0 | | ROD,LINK | ﾛｯﾄﾞ | 1 | A,B |
| 21 | Z-9-0392-0614-0 | | SCREW | ｽｸﾘｭ | 2 | A,B |
| 22 | Z-9-0811-1612-0 | | PIN,SPLIT | ﾋﾟﾝ | 2 | A,B |
| 23 | Z-9-0916-0506-0 | | WASHER | ﾜｯｼｬ | 2 | A,B |
| 24 | Z-1-23335-188-1 | | BRACKET | ﾌﾞﾗｹｯﾄ | 1 | A |
| - | Z-1-23335-477-0 | | BRACKET | ﾌﾞﾗｹｯﾄ | 1 | B<br>-1996.6 |
| - | Z-1-23335-188-1 | | BRACKET | ﾌﾞﾗｹｯﾄ | 1 | B<br>1996.7- |
| 25 | Z-1-09700-453-0 | | CLIP | ｸﾘｯﾌﾟ | 1 | B |
| 26 | Z-5-19789-003-0 | | BRACKET | ﾌﾞﾗｹｯﾄ | 1 | A,C,D,J |
| 27 | Z-0-2868-1020-0 | | BOLT | ﾎﾞﾙﾄ | 1 | A |
| - | Z-0-2868-1020-0 | | BOLT | ﾎﾞﾙﾄ | 2 | C,D,J |
| 28 | Z-9-0915-0510-0 | | WASHER | ﾜｯｼｬ | 1 | A<br>-1997.2 |

## FIG. 30 INJECTION PUMP MOUNT (E,F,G,H,K)
インジェクションポンプマウント

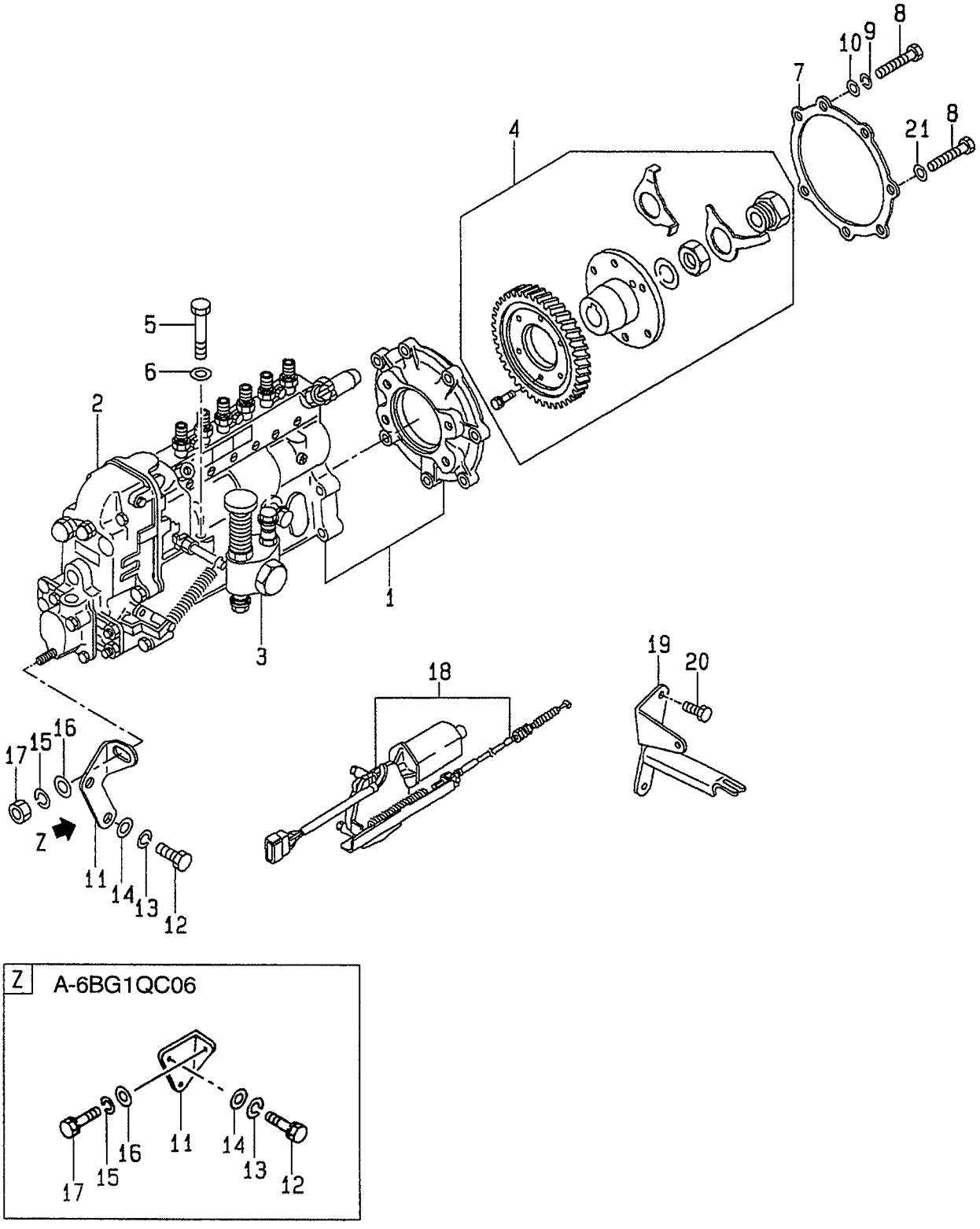

A: A-6BG1QC
B: A-6BG1TQC
C: A-6BG1QC02
D: A-6BG1QC03
E: A-6BG1QC05
F: A-6BG1QC06
G: A-6BG1QC07
H: A-6BG1QC08
J: A-6BG1QC09
K: A-6BG1QC05S

# FIG. 30

| Item No. 見出番号 | Part No. 部品番号 | Mark 記号 | Description 部品名称 | | Req'd 個数 | Remarks : serial No. 備考：実施号車 |
|---|---|---|---|---|---|---|
| A1 | Z-1-15603-300-0 | | INJECTION PUMP ASSY | ｲﾝｼﾞｪｸｼｮﾝﾎﾟﾝﾌﾟ ｱｯｾﾝ | 1 | E,H,K INC.1-4 |
| A2 | Z-1-15603-301-0 | | INJECTION PUMP ASSY | ｲﾝｼﾞｪｸｼｮﾝﾎﾟﾝﾌﾟ ｱｯｾﾝ | 1 | F INC.1-4 |
| A3 | Z-1-15603-302-0 | | INJECTION PUMP ASSY | ｲﾝｼﾞｪｸｼｮﾝﾎﾟﾝﾌﾟ ｱｯｾﾝ | 1 | G INC.1-4 |
| 1 | NO PART NO. | | INJECTION PUMP | ｲﾝｼﾞｪｸｼｮﾝﾎﾟﾝﾌﾟ | 1 | E,F,G,H,K SEE FIG.31 |
| 2 | Z-1-15730-041-0 | | GOVERNOR | ｶﾞﾊﾞﾅ | 1 | E,G,H,K SEE FIG.32 |
| - | Z-1-15730-055-0 | | GOVERNOR | ｶﾞﾊﾞﾅ | 1 | F SEE FIG.32 |
| 3 | Z-1-15750-162-0 | | FEED PUMP | ﾌｨｰﾄﾞﾎﾟﾝﾌﾟ | 1 | E,F,G,H,K SEE FIG.33 |
| 4 | Z-1-15780-172-0 | | COUPLING | ｶｯﾌﾟﾘﾝｸﾞ | 1 | E,F,G,H,K SEE FIG.34 |
| 5 | Z-0-1081-0875-0 | | BOLT | ﾎﾞﾙﾄ | 4 | G |
| 6 | Z-9-09851-934-0 | | WASHER | ﾜｯｼｬ | 4 | G |
| 7 | Z-8-94370-675-0 | | PACKING | ﾊﾟｯｷﾝｸﾞ | 1 | E,F,G,H,K |
| 8 | Z-0-1081-0860-0 | | BOLT | ﾎﾞﾙﾄ | 7 | E & F & H & K -1999.3 |
| - | Z-0-1080-5860-0 | | BOLT | ﾎﾞﾙﾄ | 7 | E & F & H & K 1999.4- |
| - | Z-5-09000-222-1 | | BOLT | ﾎﾞﾙﾄ | 1 | G |
| - | Z-0-1080-5860-0 | | BOLT | ﾎﾞﾙﾄ | 6 | G |
| 9 | Z-9-0915-0508-0 | | WASHER | ﾜｯｼｬ | 7 | E,F,H,K |
| - | Z-9-0915-0508-0 | | WASHER | ﾜｯｼｬ | 6 | G |
| 10 | Z-9-0916-0508-0 | | WASHER | ﾜｯｼｬ | 7 | E,F,H,K |
| - | Z-9-0916-0508-0 | | WASHER | ﾜｯｼｬ | 6 | G |
| 11 | Z-5-19751-004-2 | | BRACKET | ﾌﾞﾗｹｯﾄ | 1 | E,G,H,K |
| - | Z-1-19751-120-0 | | BRACKET | ﾌﾞﾗｹｯﾄ | 1 | F |
| 12 | Z-0-5004-1020-0 | | BOLT | ﾎﾞﾙﾄ | 2 | E,F,G,H,K |
| 13 | Z-9-0915-0510-0 | | WASHER | ﾜｯｼｬ | 2 | E,F,G,H,K |
| 14 | Z-9-0916-0710-0 | | WASHER | ﾜｯｼｬ | 2 | E,F,G,H,K |
| 15 | Z-9-0915-0510-0 | | WASHER | ﾜｯｼｬ | 1 | E,F,G,H,K |
| 16 | Z-9-0916-0710-0 | | WASHER | ﾜｯｼｬ | 3 | E,G,H,K |
| - | Z-9-0916-0710-0 | | WASHER | ﾜｯｼｬ | 4 | F |
| 17 | Z-9-0911-0410-0 | | NUT | ﾅｯﾄ | 1 | E,G,H,K |
| - | Z-0-5004-1025-0 | | BOLT | ﾎﾞﾙﾄ | 1 | F |
| 18 | Z-1-81900-137-2 | | STOP,ENGINE | ｽﾄｯﾌﾟ | 1 | E,F,G,H,K |
| 19 | Z-5-19789-003-0 | | BRACKET | ﾌﾞﾗｹｯﾄ | 1 | E,F,G,H,K |
| 20 | Z-0-2868-1020-0 | | BOLT | ﾎﾞﾙﾄ | 2 | E,F,G,H,K |
| 21 | Z-9-0957-2008-0 | | PACKING | ﾊﾟｯｷﾝｸﾞ | 1 | G |

## FIG. 31 INJECTION PUMP (INNER PARTS)
インジェクションポンプ(インナパーツ)

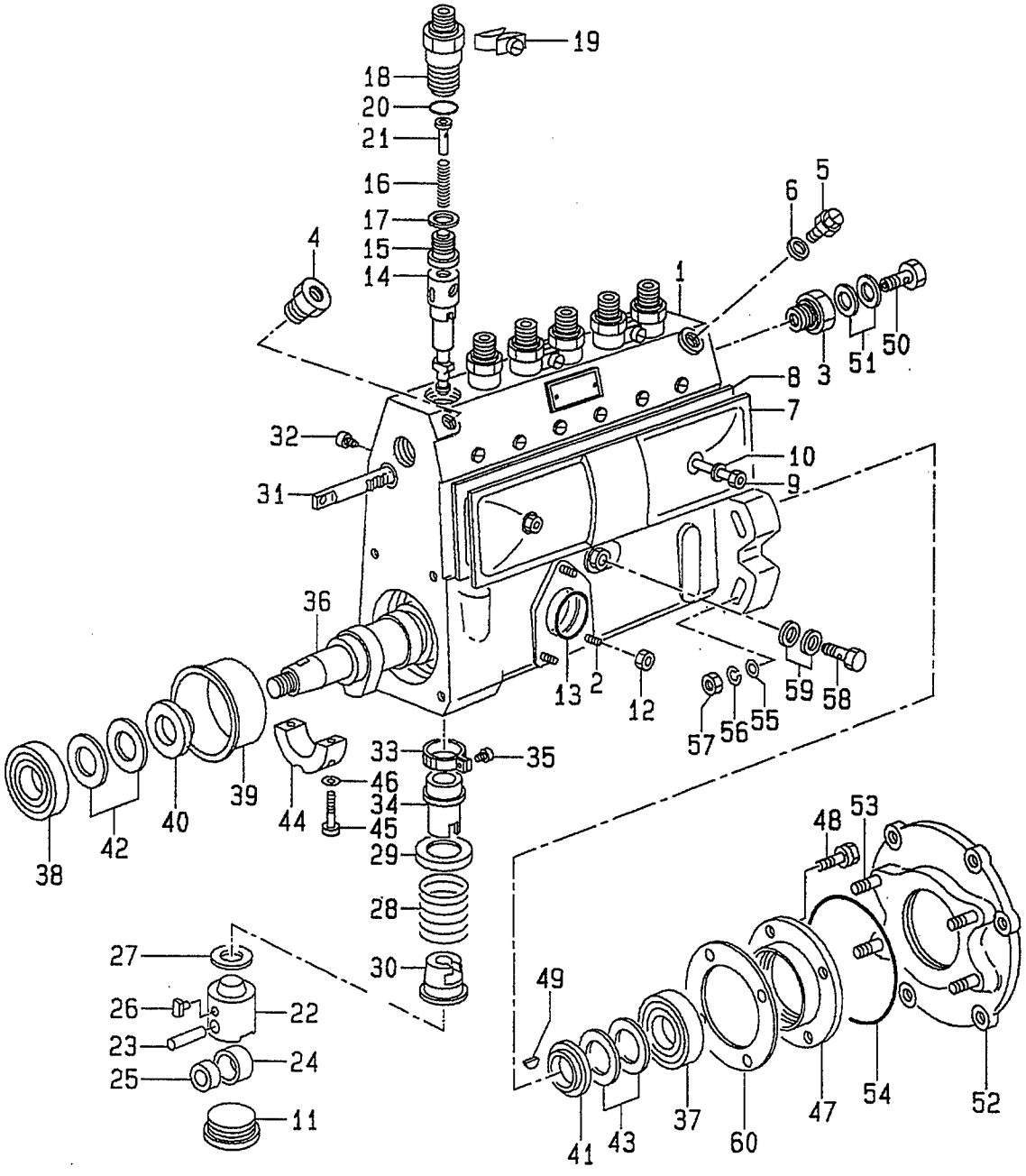

A: A-6BG1QC
B: A-6BG1TQC
C: A-6BG1QC02
D: A-6BG1QC03
E: A-6BG1QC05
F: A-6BG1QC06
G: A-6BG1QC07
H: A-6BG1QC08
J: A-6BG1QC09
K: A-6BG1QC05S

**FIG. 31**

| Item No. 見出番号 | Part No. 部品番号 | Mark 記号 | Description 部品名称 | | Req'd 個数 | Remarks : serial No. 備考：実施号車 |
|---|---|---|---|---|---|---|
| 1 | Z-5-15611-025-0 | | HOUSING | ﾊｳｼﾞﾝｸﾞ | 1 | A,C,D,E,F,G,H,J,K |
| | | | | | | INC.2-6 |
| - | Z-1-15611-184-0 | | HOUSING | ﾊｳｼﾞﾝｸﾞ | 1 | B |
| | | | | | | INC.2-5 |
| 2 | Z-9-8121-5115-0 | | STUD | ｽﾀｯﾄﾞ | 3 | |
| 3 | Z-9-8123-5017-0 | | ADAPTER | ｱﾀﾞﾌﾟﾀ | 1 | |
| 4 | Z-5-15619-044-0 | | ADAPTER | ｱﾀﾞﾌﾟﾀ | 1 | A,C,D,E,F,G,H,J,K |
| - | Z-1-15619-190-0 | | ADAPTER | ｱﾀﾞﾌﾟﾀ | 1 | B |
| 5 | Z-1-15619-024-0 | | BOLT | ﾎﾞﾙﾄ | 1 | A,C,D,E,F,G,H,J,K |
| - | Z-1-15619-191-0 | | BOLT | ﾎﾞﾙﾄ | 1 | B |
| 6 | Z-8-94144-588-0 | | GASKET | ｶﾞｽｹｯﾄ | 1 | A,C,D,E,F,G,H,J,K |
| 7 | Z-1-15612-050-0 | | COVER | ｶﾊﾞｰ | 1 | INC.8 |
| 8 | Z-1-15729-960-0 | | GASKET | ｶﾞｽｹｯﾄ | 1 | |
| 9 | Z-1-15619-003-0 | | SCREW | ｽｸﾘｭ | 2 | |
| 10 | Z-9-8121-5144-0 | | GASKET | ｶﾞｽｹｯﾄ | 2 | |
| 11 | Z-5-15619-136-0 | | PLUG | ﾌﾟﾗｸﾞ | 6 | A,C,D,E,F,G,H,J,K |
| - | Z-1-15619-160-0 | | PLUG | ﾌﾟﾗｸﾞ | 6 | B |
| 12 | Z-8-94171-110-0 | | NUT | ﾅｯﾄ | 3 | |
| 13 | Z-1-09623-013-0 | | O RING | Oﾘﾝｸﾞ | 1 | |
| 14 | Z-8-97026-750-0 | | PLUNGER | ﾌﾟﾗﾝｼﾞｬ | 6 | A |
| - | Z-8-97041-664-0 | | PLUNGER | ﾌﾟﾗﾝｼﾞｬ | 6 | B |
| - | Z-1-15631-069-0 | | PLUNGER | ﾌﾟﾗﾝｼﾞｬ | 6 | C,D,E,F,G,H,J,K |
| 15 | Z-8-94149-756-0 | | VALVE,DELIVERY | ﾊﾞﾙﾌﾞ | 6 | A |
| - | Z-1-15641-031-0 | | VALVE,DELIVERY | ﾊﾞﾙﾌﾞ | 6 | B |
| - | Z-8-97146-824-0 | | VALVE,DELIVERY | ﾊﾞﾙﾌﾞ | 6 | C,D,E,F,G,H,J,K |
| 16 | Z-5-15643-001-0 | | SPRING | ｽﾌﾟﾘﾝｸﾞ | 6 | A,C,D,E,F,G,H,J,K |
| - | Z-1-15634-011-0 | | SPRING | ｽﾌﾟﾘﾝｸﾞ | 6 | B |
| 17 | Z-1-15649-001-0 | | GASKET | ｶﾞｽｹｯﾄ | 6 | A,C,D,E,F,G,H,J,K |
| - | Z-1-15619-103-0 | | GASKET | ｶﾞｽｹｯﾄ | 6 | B |
| 18 | Z-5-15644-017-0 | | HOLDER | ﾎﾙﾀﾞ | 6 | A,C,D,E,F,G,H,J,K |
| - | Z-1-15644-009-0 | | HOLDER | ﾎﾙﾀﾞ | 6 | B |
| 19 | Z-5-15625-001-0 | | PLATE | ﾌﾟﾚｰﾄ | 3 | |
| 20 | Z-1-09623-052-0 | | O RING | Oﾘﾝｸﾞ | 6 | A,C,D,E,F,G,H,J,K |
| - | Z-9-8123-5046-0 | | O RING | Oﾘﾝｸﾞ | 6 | B |
| 21 | Z-5-15629-045-0 | | STOPPER | ｽﾄｯﾊﾟ | 6 | A,C,D,E,F,G,H,J,K |
| - | Z-1-15649-005-0 | | STOPPER | ｽﾄｯﾊﾟ | 6 | B |
| 22 | Z-9-8122-1223-0 | | TAPPET | ﾀﾍﾟｯﾄ | 6 | A,C,D,E,F,G,H,J,K |
| | | | | | | INC.23-26 |
| - | Z-1-15622-006-0 | | TAPPET | ﾀﾍﾟｯﾄ | 6 | B |
| | | | | | | INC.23-26 |
| 23 | Z-9-8122-2220-0 | | PIN | ﾋﾟﾝ | 6 | A,C,D,E,F,G,H,J,K |
| - | Z-9-8121-5185-0 | | PIN | ﾋﾟﾝ | 6 | B |
| 24 | Z-1-15622-003-0 | | ROLLER | ﾛｰﾗ | 6 | A,C,D,E,F,G,H,J,K |
| - | Z-1-15629-010-0 | | ROLLER | ﾛｰﾗ | 6 | B |
| 25 | Z-1-15629-001-0 | | BUSHING | ﾌﾞｯｼﾝｸﾞ | 6 | A,C,D,E,F,G,H,J,K |
| - | Z-1-15619-162-0 | | BUSHING | ﾌﾞｯｼﾝｸﾞ | 6 | B |
| 26 | Z-5-15619-041-0 | | GUIDE | ｶﾞｲﾄﾞ | 6 | A,C,D,E,F,G,H,J,K |
| - | Z-1-15629-018-0 | | GUIDE | ｶﾞｲﾄﾞ | 6 | B |
| 27 | Z-5-15619-034-0 | | SHIM | ｼﾑ | AR | t=0.30mm |
| - | Z-5-15619-035-0 | | SHIM | ｼﾑ | AR | t=0.40mm |

## FIG. 31 INJECTION PUMP (INNER PARTS)
インジェクションポンプ(インナパーツ)

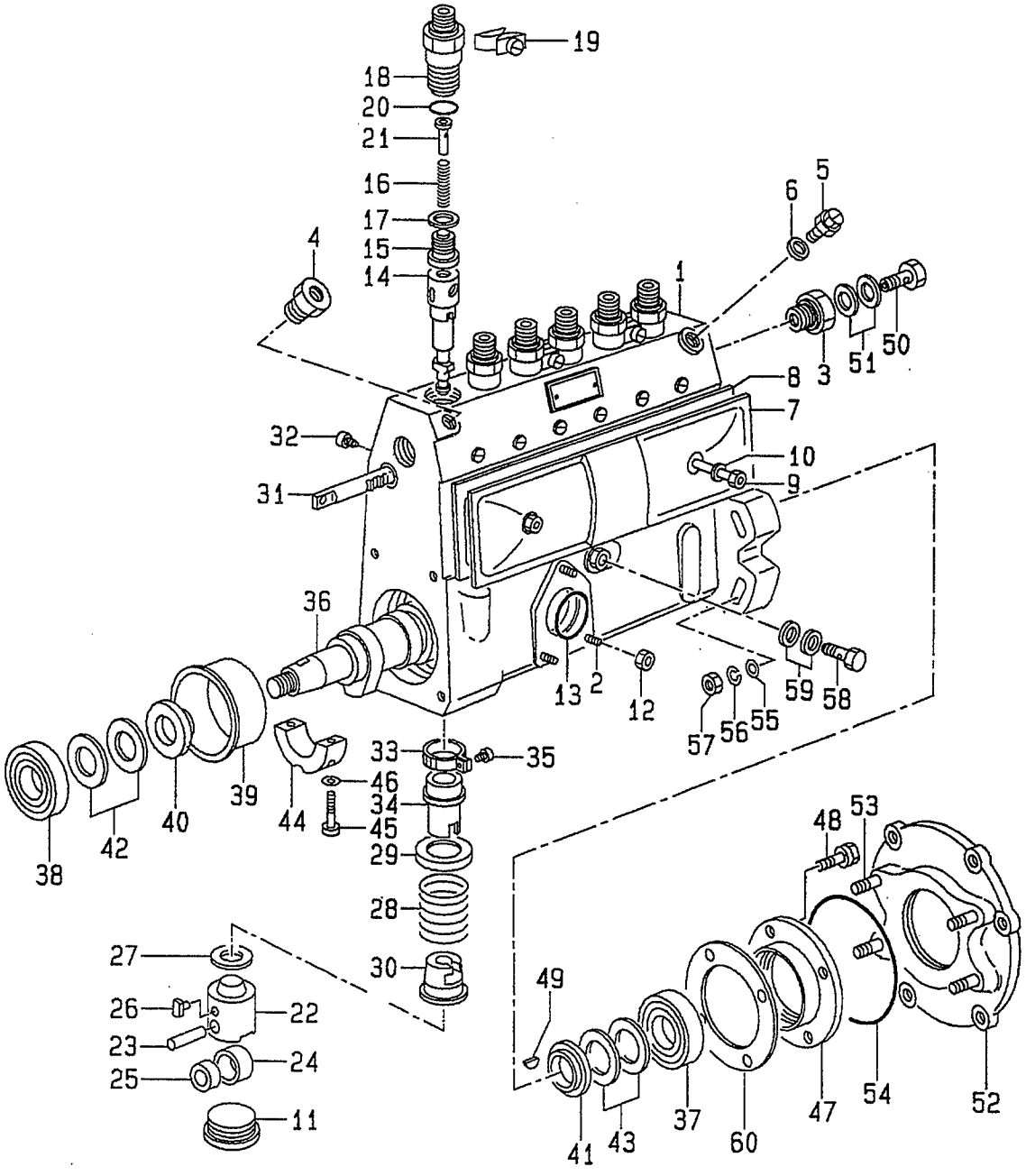

A: A-6BG1QC
B: A-6BG1TQC
C: A-6BG1QC02
D: A-6BG1QC03
E: A-6BG1QC05
F: A-6BG1QC06
G: A-6BG1QC07
H: A-6BG1QC08
J: A-6BG1QC09
K: A-6BG1QC05S

**FIG. 31**

| Item No. 見出番号 | Part No. 部品番号 | Mark 記号 | Description 部品名称 | | Req'd 個数 | Remarks : serial No. 備考：実施号車 |
|---|---|---|---|---|---|---|
| 27 | Z-5-15619-036-0 | | SHIM | ｼﾑ | AR | t=0.50mm |
| - | Z-5-15619-001-0 | | SHIM | ｼﾑ | AR | t=0.60mm |
| - | Z-5-15619-002-0 | | SHIM | ｼﾑ | AR | t=0.70mm |
| - | Z-5-15619-003-0 | | SHIM | ｼﾑ | AR | t=0.80mm |
| - | Z-5-15619-004-0 | | SHIM | ｼﾑ | AR | t=0.90mm |
| - | Z-5-15619-005-0 | | SHIM | ｼﾑ | AR | t=1.00mm |
| - | Z-5-15619-007-0 | | SHIM | ｼﾑ | AR | t=1.10mm |
| - | Z-5-15619-008-0 | | SHIM | ｼﾑ | AR | t=1.20mm |
| - | Z-5-15619-009-0 | | SHIM | ｼﾑ | AR | t=1.30mm |
| - | Z-5-15619-010-0 | | SHIM | ｼﾑ | AR | t=1.40mm |
| - | Z-5-15619-011-0 | | SHIM | ｼﾑ | AR | t=0.55mm |
| - | Z-5-15619-012-0 | | SHIM | ｼﾑ | AR | t=0.65mm |
| - | Z-5-15619-013-0 | | SHIM | ｼﾑ | AR | t=0.75mm |
| - | Z-5-15619-015-0 | | SHIM | ｼﾑ | AR | t=0.85mm |
| - | Z-9-8123-5042-0 | | SHIM | ｼﾑ | AR | t=0.95mm |
| - | Z-9-8123-5043-0 | | SHIM | ｼﾑ | AR | t=1.05mm |
| - | Z-9-8123-5044-0 | | SHIM | ｼﾑ | AR | t=1.15mm |
| - | Z-9-8123-5045-0 | | SHIM | ｼﾑ | AR | t=1.25mm |
| - | Z-5-15619-106-0 | | SHIM | ｼﾑ | AR | t=1.50mm |
| - | Z-5-15619-107-0 | | SHIM | ｼﾑ | AR | t=1.60mm |
| - | Z-5-15619-025-0 | | SHIM | ｼﾑ | AR | t=0.20mm |
| - | Z-5-15619-026-0 | | SHIM | ｼﾑ | AR | t=0.25mm |
| - | Z-5-15619-027-0 | | SHIM | ｼﾑ | AR | t=0.35mm |
| - | Z-5-15619-037-0 | | SHIM | ｼﾑ | AR | t=0.45mm |
| - | Z-5-15619-108-0 | | SHIM | ｼﾑ | AR | t=1.35mm |
| - | Z-5-15619-109-0 | | SHIM | ｼﾑ | AR | t=1.45mm |
| - | Z-5-15619-110-0 | | SHIM | ｼﾑ | AR | t=1.55mm |
| 28 | Z-5-15643-009-0 | | SPRING,PLUNGER | ｽﾌﾟﾘﾝｸﾞ | 6 | A,C,D,E,F,G,H,J,K |
| - | Z-1-15634-007-0 | | SPRING,PLUNGER | ｽﾌﾟﾘﾝｸﾞ | 6 | B |
| 29 | Z-9-8123-5015-0 | | SEAT,SPRING | ｼｰﾄ | 6 | A,C,D,E,F,G,H,J,K |
| - | Z-1-15639-022-0 | | SEAT,SPRING | ｼｰﾄ | 6 | B |
| 30 | Z-9-8123-5021-0 | | SEAT,SPRING | ｼｰﾄ | 6 | A,C,D,E,F,G,H,J,K |
| - | Z-1-15639-023-0 | | SEAT,SPRING | ｼｰﾄ | 6 | B |
| 31 | Z-5-15637-003-0 | | RACK,CONTROL | ﾗｯｸ | 1 | |
| 32 | Z-1-15639-003-0 | | SCREW | ｽｸﾘｭ | 1 | |
| 33 | Z-9-8122-5057-0 | | PINION | ﾋﾟﾆｵﾝ | 6 | |
| 34 | Z-9-8122-5058-0 | | SLEEVE,CONTROL | ｽﾘｰﾌﾞ | 6 | A,C,D,E,F,G,H,J,K |
| - | Z-9-8123-1523-0 | | SLEEVE,CONTROL | ｽﾘｰﾌﾞ | 6 | B |
| 35 | Z-9-8123-5003-0 | | SCREW | ｽｸﾘｭ | 6 | |
| 36 | Z-5-15621-025-0 | | CAMSHAFT | ｶﾑｼｬﾌﾄ | 1 | A,C,D,E,F,G,H,J,K |
| - | Z-1-15621-070-0 | | CAMSHAFT | ｶﾑｼｬﾌﾄ | 1 | B |
| 37 | Z-5-09800-038-0 | | BEARING | ﾍﾞｱﾘﾝｸﾞ | 1 | A,C,D,E,F,G,H,J,K<br>NTN MAKE |
| - | Z-9-00090-677-0 | | BEARING | ﾍﾞｱﾘﾝｸﾞ | 1 | A,C,D,E,F,G,H,J,K<br>NSK MAKE |
| - | Z-1-15629-003-0 | | BEARING | ﾍﾞｱﾘﾝｸﾞ | 1 | B<br>NTN MAKE |
| - | Z-1-15629-002-0 | | BEARING | ﾍﾞｱﾘﾝｸﾞ | 1 | B<br>NSK MAKE |
| 38 | Z-9-00090-677-0 | | BEARING | ﾍﾞｱﾘﾝｸﾞ | 1 | NSK MAKE |

## FIG. 31 INJECTION PUMP (INNER PARTS)
インジェクションポンプ(インナパーツ)

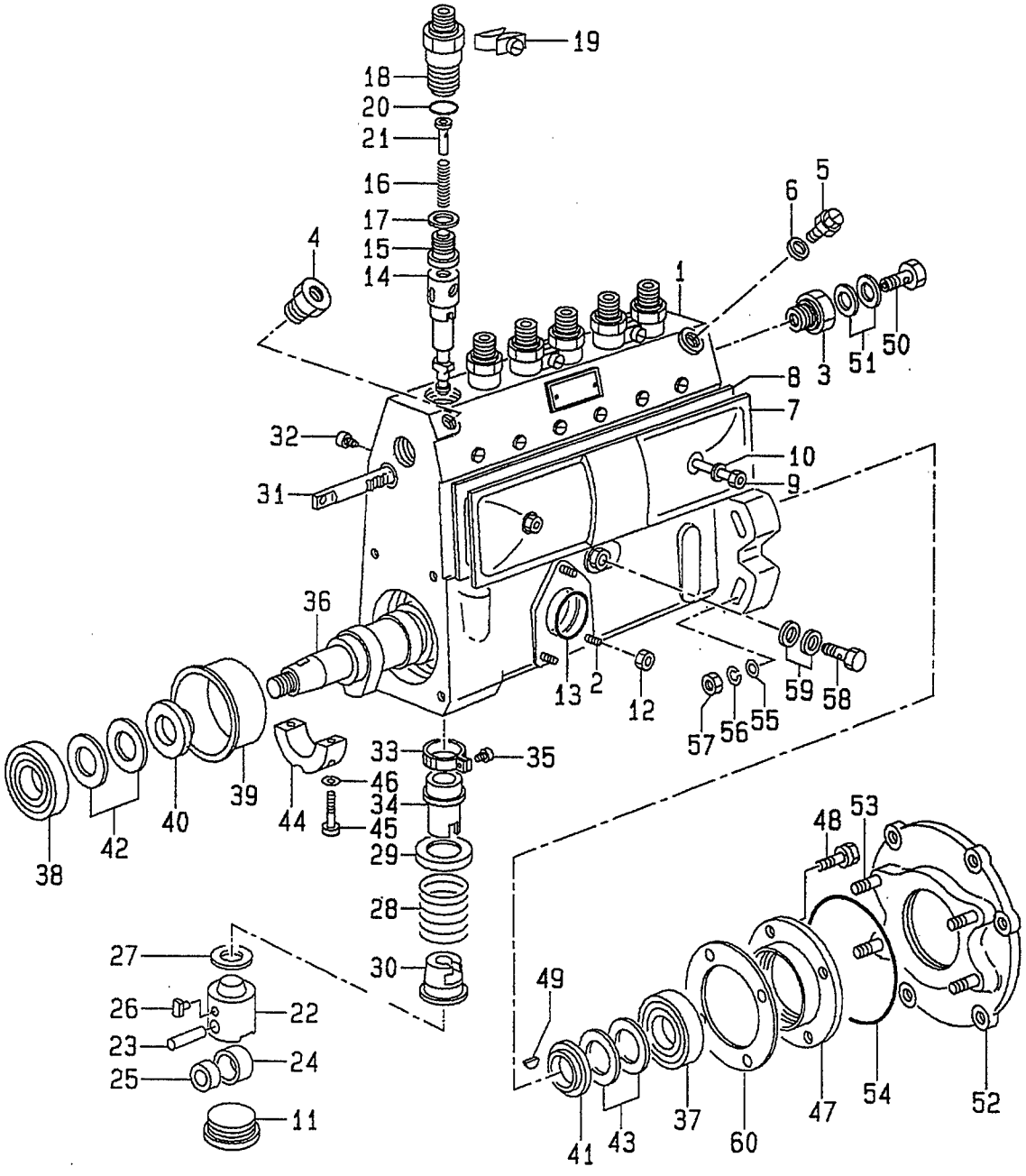

A: A-6BG1QC
B: A-6BG1TQC
C: A-6BG1QC02
D: A-6BG1QC03
E: A-6BG1QC05
F: A-6BG1QC06
G: A-6BG1QC07
H: A-6BG1QC08
J: A-6BG1QC09
K: A-6BG1QC05S

**FIG. 31**

| Item No. 見出番号 | Part No. 部品番号 | Mark 記号 | Description 部品名称 | | Req'd 個数 | Remarks : serial No. 備考：実施号車 |
|---|---|---|---|---|---|---|
| 38 | Z-5-09800-038-0 | | BEARING | ﾍﾞｱﾘﾝｸﾞ | 1 | NTN MAKE |
| 39 | Z-1-15629-015-0 | | RING | ﾘﾝｸﾞ | 1 | B |
| 40 | Z-9-8122-5047-0 | | RING | ﾘﾝｸﾞ | 1 | A,C,D,E,F,G,H,J,K |
| - | Z-9-8122-5059-0 | | RING | ﾘﾝｸﾞ | 1 | B |
| 41 | Z-9-8122-5047-0 | | RING | ﾘﾝｸﾞ | 1 | A,C,D,E,F,H,J,K |
| - | Z-1-15629-004-0 | | RING | ﾘﾝｸﾞ | 1 | B,G |
| 42 | Z-5-15629-015-0 | | SHIM | ｼﾑ | AR | t=0.10mm |
| - | Z-5-15629-016-0 | | SHIM | ｼﾑ | AR | t=0.12mm |
| - | Z-5-15629-017-0 | | SHIM | ｼﾑ | AR | t=0.14mm |
| - | Z-5-15629-018-0 | | SHIM | ｼﾑ | AR | t=0.16mm |
| - | Z-5-15629-019-0 | | SHIM | ｼﾑ | AR | t=0.18mm |
| - | Z-5-15629-020-0 | | SHIM | ｼﾑ | AR | t=0.50mm |
| - | Z-5-15629-038-0 | | SHIM | ｼﾑ | AR | t=1.00mm |
| - | Z-9-8122-5033-0 | | SHIM | ｼﾑ | AR | t=0.30mm |
| - | Z-5-15619-039-0 | | SHIM | ｼﾑ | AR | t=0.70mm |
| - | Z-5-15629-090-0 | | SHIM | ｼﾑ | AR | t=1.40mm |
| - | Z-1-15639-088-0 | | SHIM | ｼﾑ | AR | t=2.40mm |
| 43 | Z-5-15629-015-0 | | SHIM | ｼﾑ | AR | A,C,D,E,F,G,H,J,K t=0.10mm |
| - | Z-5-15629-016-0 | | SHIM | ｼﾑ | AR | A,C,D,E,F,G,H,J,K t=0.12mm |
| - | Z-5-15629-017-0 | | SHIM | ｼﾑ | AR | A,C,D,E,F,G,H,J,K t=0.14mm |
| - | Z-5-15629-018-0 | | SHIM | ｼﾑ | AR | A,C,D,E,F,G,H,J,K t=0.16mm |
| - | Z-5-15629-019-0 | | SHIM | ｼﾑ | AR | A,C,D,E,F,G,H,J,K t=0.18mm |
| - | Z-5-15629-020-0 | | SHIM | ｼﾑ | AR | A,C,D,E,F,G,H,J,K t=0.50mm |
| - | Z-5-15629-038-0 | | SHIM | ｼﾑ | AR | A,C,D,E,F,G,H,J,K t=1.00mm |
| - | Z-9-8122-5033-0 | | SHIM | ｼﾑ | AR | A,C,D,E,F,G,H,J,K t=0.30mm |
| - | Z-5-15619-039-0 | | SHIM | ｼﾑ | AR | A,C,D,E,F,G,H,J,K t=0.70mm |
| - | Z-5-15629-090-0 | | SHIM | ｼﾑ | AR | A,C,D,E,F,G,H,J,K t=1.40mm |
| - | Z-1-15639-088-0 | | SHIM | ｼﾑ | AR | A,C,D,E,F,G,H,J,K t=2.40mm |
| - | Z-9-8122-5049-0 | | SHIM | ｼﾑ | AR | B t=0.10mm |
| - | Z-9-8122-5050-0 | | SHIM | ｼﾑ | AR | B t=0.12mm |
| - | Z-9-8122-5051-0 | | SHIM | ｼﾑ | AR | B t=0.14mm |
| - | Z-9-8122-5052-0 | | SHIM | ｼﾑ | AR | B t=0.16mm |
| - | Z-9-8122-5053-0 | | SHIM | ｼﾑ | AR | B t=0.18mm |

## FIG. 31 INJECTION PUMP (INNER PARTS)
インジェクションポンプ(インナパーツ)

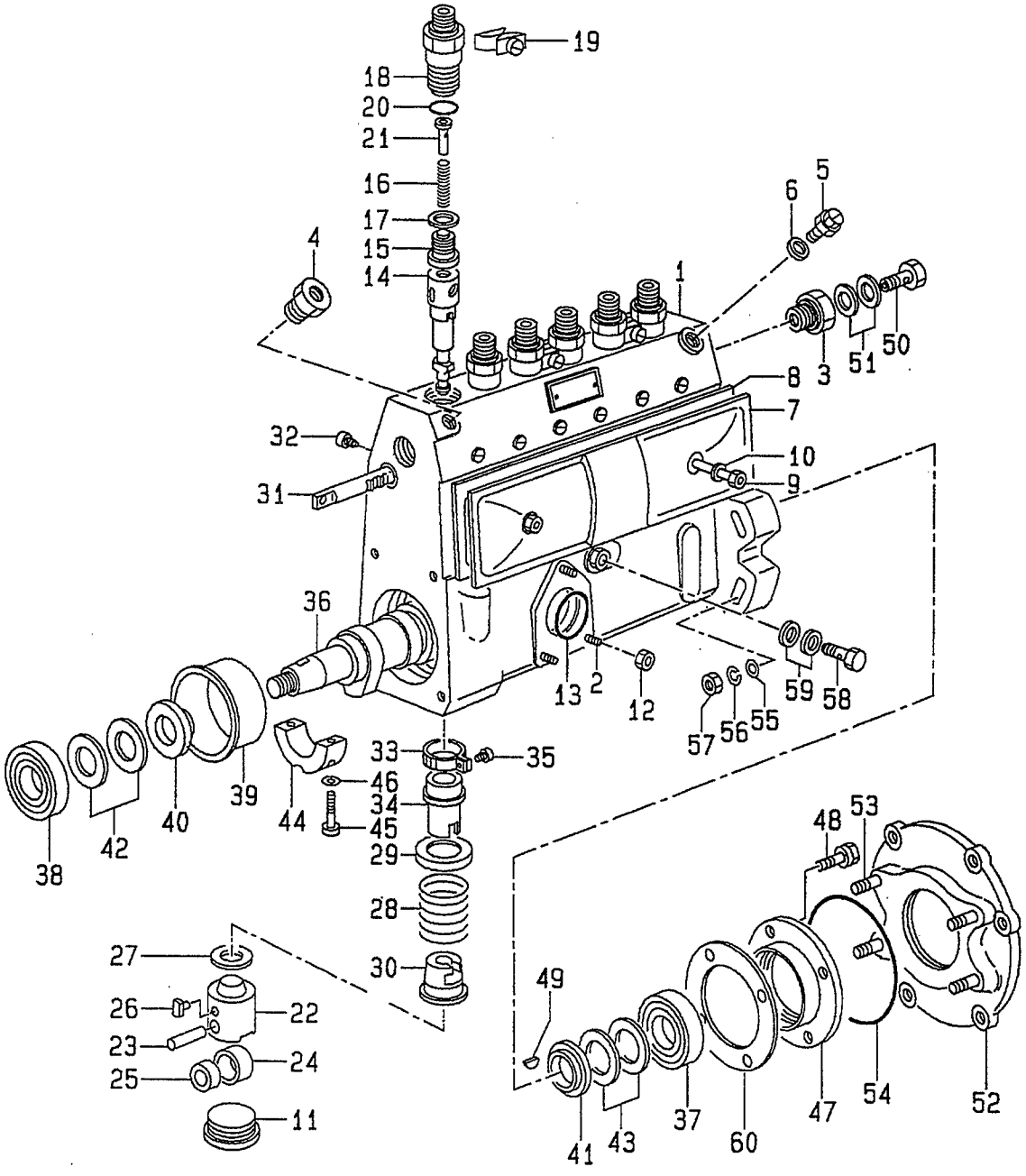

A: A-6BG1QC
B: A-6BG1TQC
C: A-6BG1QC02
D: A-6BG1QC03
E: A-6BG1QC05
F: A-6BG1QC06
G: A-6BG1QC07
H: A-6BG1QC08
J: A-6BG1QC09
K: A-6BG1QC05S

**FIG. 31**

| Item No. 見出番号 | Part No. 部品番号 | Mark 記号 | Description 部品名称 | | Req'd 個数 | Remarks : serial No. 備考：実施号車 |
|---|---|---|---|---|---|---|
| 43 | Z-9-8122-5054-0 | | SHIM | ｼﾑ | AR | B<br>t=0.50mm |
| - | Z-1-15629-007-0 | | SHIM | ｼﾑ | AR | B<br>t=0.30mm |
| - | Z-1-15629-008-0 | | SHIM | ｼﾑ | AR | B<br>t=1.00mm |
| - | Z-1-15629-105-0 | | SHIM | ｼﾑ | AR | B<br>t=0.70mm |
| 44 | Z-1-15619-033-0 | | BEARING,CENTER | ﾍﾞｱﾘﾝｸﾞ | 1 | A,C,D,E,F,G,H,J,K |
| - | Z-1-15619-237-0 | | BEARING,CENTER | ﾍﾞｱﾘﾝｸﾞ | 1 | B |
| 45 | Z-9-8841-0066-0 | | SCREW | ｽｸﾘｭ | 2 | A,C,D,E,F,G,H,J,K |
| - | Z-1-15629-017-0 | | SCREW | ｽｸﾘｭ | 2 | B |
| 46 | Z-9-8122-5043-0 | | GASKET | ｶﾞｽｹｯﾄ | 2 | |
| 47 | Z-1-15619-243-0 | | COVER | ｶﾊﾞｰ | 1 | A,C,D,E,F,G,H,J,K |
| - | Z-1-15629-047-0 | | COVER | ｶﾊﾞｰ | 1 | B |
| 48 | Z-9-0190-0614-0 | | BOLT | ﾎﾞﾙﾄ | 4 | A,C,D,E,F,G,H,J,K |
| - | Z-1-15619-282-0 | | BOLT | ﾎﾞﾙﾄ | 4 | B |
| 49 | Z-5-15619-049-0 | | KEY,WOODRUFF | ｷｰ | 1 | A |
| - | Z-5-83539-024-0 | | KEY,WOODRUFF | ｷｰ | 1 | B |
| - | Z-5-19619-049-0 | | KEY,WOODRUFF | ｷｰ | 1 | C,D,E,F,G,H,J,K |
| 50 | Z-1-15759-011-0 | | BOLT,EYE | ﾎﾞﾙﾄ | 1 | A,C,D,E,F,G,H,J,K |
| 51 | Z-1-09630-085-0 | | PACKING | ﾊﾟｯｷﾝｸﾞ | 2 | A,C,D,E,F,G,H,J,K |
| 52 | Z-1-19751-049-0 | | BRACKET | ﾌﾞﾗｹｯﾄ | 1 | A,C,D,E,F,H,J,K<br>INC.53 |
| - | Z-1-15619-326-0 | | BRACKET | ﾌﾞﾗｹｯﾄ | 1 | B<br>INC.53 |
| - | Z-5-19751-050-0 | | BRACKET | ﾌﾞﾗｹｯﾄ | 1 | G<br>INC.53 |
| 53 | Z-9-0410-1030-0 | | STUD | ｽﾀｯﾄﾞ | 4 | |
| 54 | Z-5-15619-156-0 | | O RING | Oﾘﾝｸﾞ | 1 | A,C,D,E,F,G,H,J,K |
| - | Z-5-15629-049-0 | | O RING | Oﾘﾝｸﾞ | 1 | B |
| 55 | Z-9-0916-4510-0 | | WASHER | ﾜｯｼｬ | 4 | |
| 56 | Z-9-0915-0610-0 | | WASHER | ﾜｯｼｬ | 4 | |
| 57 | Z-5-15639-002-0 | | NUT | ﾅｯﾄ | 4 | |
| 58 | Z-1-15619-092-0 | | BOLT,EYE | ﾎﾞﾙﾄ | 1 | |
| 59 | Z-1-15719-093-0 | | GASKET | ｶﾞｽｹｯﾄ | 2 | |
| 60 | Z-8-97083-337-0 | | SHIM | ｼﾑ | 1 | B |

# FIG. 32 GOVERNOR
ｶﾞﾊﾞﾅ

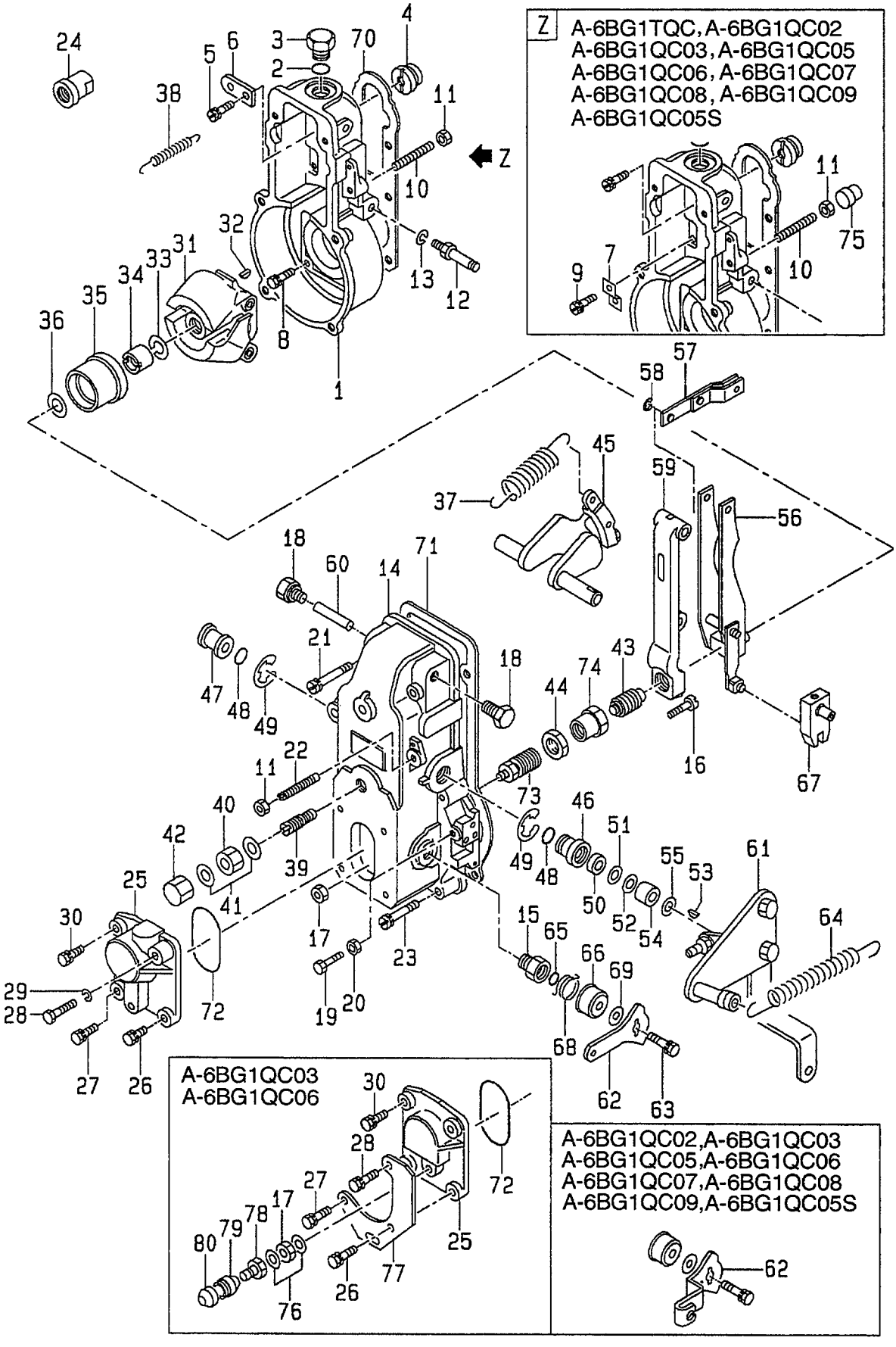

A: A-6BG1QC
B: A-6BG1TQC
C: A-6BG1QC02
D: A-6BG1QC03
E: A-6BG1QC05
F: A-6BG1QC06
G: A-6BG1QC07
H: A-6BG1QC08
J: A-6BG1QC09
K: A-6BG1QC05S

**FIG. 32**

| Item No. 見出番号 | Part No. 部品番号 | Mark 記号 | Description 部品名称 | | Req'd 個数 | Remarks : serial No. 備考：実施号車 |
|---|---|---|---|---|---|---|
| A1 | Z-1-15770-870-0 | | GOVERNOR ASSY | ｶﾞﾊﾞﾅｱｯｾﾝ | 1 | A<br>INC.1-74 |
| A2 | Z-1-15730-009-0 | | GOVERNOR ASSY | ｶﾞﾊﾞﾅｱｯｾﾝ | 1 | B<br>INC.1-75 |
| A3 | Z-1-15730-041-0 | | GOVERNOR ASSY | ｶﾞﾊﾞﾅｱｯｾﾝ | 1 | C,E,G,H,J,K<br>INC.1-72 |
| A4 | Z-1-15730-042-0 | | GOVERNOR ASSY | ｶﾞﾊﾞﾅｱｯｾﾝ | 1 | D(FD70Z8,FD80Z8)<br>INC.1-80 |
| - | Z-1-15730-042-0 | | GOVERNOR ASSY | ｶﾞﾊﾞﾅｱｯｾﾝ | 1 | D(FD100Z8) : E NO.-1393<br>INC.1-80 |
| A5 | Z-1-15730-055-0 | | GOVERNOR ASSY | ｶﾞﾊﾞﾅｱｯｾﾝ | 1 | D(FD100Z8) : E NO.1394-<br>INC.1-80 |
| - | Z-1-15730-055-0 | | GOVERNOR ASSY | ｶﾞﾊﾞﾅｱｯｾﾝ | 1 | F<br>INC.1-80 |
| 1 | Z-5-15721-004-0 | | HOUSING | ﾊｳｼﾞﾝｸﾞ | 1 | |
| 2 | Z-1-15729-015-0 | | O RING | Oﾘﾝｸﾞ | 1 | |
| 3 | Z-1-15729-038-0 | | PLUG | ﾌﾟﾗｸﾞ | 1 | |
| 4 | Z-9-81315-065-0 | | ADAPTER | ｱﾀﾞﾌﾟﾀ | 1 | |
| 5 | Z-9-0190-0818-0 | | BOLT | ﾎﾞﾙﾄ | 1 | |
| 6 | Z-8-91325-397-0 | | PLATE | ﾌﾟﾚｰﾄ | 1 | A |
| 7 | Z-9-81325-391-0 | | PLATE | ﾌﾟﾚｰﾄ | 1 | B,C,D,E,F,G,H,J,K |
| 8 | Z-5-15729-027-0 | | BOLT | ﾎﾞﾙﾄ | 6 | A,F |
| - | Z-5-15729-027-0 | | BOLT | ﾎﾞﾙﾄ | 5 | B,C,E,G,H,J,K |
| - | Z-5-15729-027-0 | | BOLT | ﾎﾞﾙﾄ | 5 | D(FD70Z8,FD80Z8) |
| - | Z-5-15729-027-0 | | BOLT | ﾎﾞﾙﾄ | 5 | D(FD100Z8) : E NO.-1393 |
| - | Z-5-15729-027-0 | | BOLT | ﾎﾞﾙﾄ | 6 | D(FD100Z8) : E NO.1394- |
| 9 | Z-5-15729-071-0 | | BOLT | ﾎﾞﾙﾄ | 1 | B,C,D,E,F,G,H,J,K |
| 10 | Z-5-15729-123-0 | | SCREW | ｽｸﾘｭ | 1 | A,C,E,G,H,J,K |
| - | Z-1-15729-644-0 | | SCREW | ｽｸﾘｭ | 1 | B |
| - | Z-1-15729-642-0 | | SCREW | ｽｸﾘｭ | 1 | B |
| - | Z-1-15779-502-0 | | SCREW | ｽｸﾘｭ | 1 | D,F |
| 11 | Z-9-8441-0027-0 | | NUT | ﾅｯﾄ | 2 | A,C,E,G,H,J,K |
| - | Z-9-8441-0027-0 | | NUT | ﾅｯﾄ | 1 | B,D,F |
| - | Z-1-15729-643-0 | | NUT | ﾅｯﾄ | 1 | B |
| - | Z-1-15779-508-0 | | NUT | ﾅｯﾄ | 1 | D,F |
| 12 | Z-8-97138-534-0 | | BOLT | ﾎﾞﾙﾄ | 1 | A,C,E,F,G,H,J,K |
| - | Z-1-15729-226-0 | | BOLT | ﾎﾞﾙﾄ | 1 | B |
| - | Z-8-97138-534-0 | | BOLT | ﾎﾞﾙﾄ | 1 | D(FD70Z8,FD80Z8) |
| - | Z-8-97138-534-0 | | BOLT | ﾎﾞﾙﾄ | 1 | D(FD100Z8) : E NO.-1393 |
| - | Z-1-15779-562-0 | | BOLT | ﾎﾞﾙﾄ | 1 | D(FD100Z8) : E NO.1394- |
| - | Z-1-15779-562-0 | | BOLT | ﾎﾞﾙﾄ | 1 | F |
| 13 | Z-1-83579-492-0 | | WASHER | ﾜｯｼｬ | 1 | |
| 14 | Z-5-15721-020-0 | | COVER | ｶﾊﾞｰ | 1 | A,B,C,E,G,H,J,K<br>INC.15 |
| - | Z-5-15721-022-0 | | COVER | ｶﾊﾞｰ | 1 | D,F<br>INC.15 |
| 15 | Z-9-81325-429-0 | | BUSHING | ﾌﾞｯｼﾝｸﾞ | 1 | |
| 16 | Z-9-81325-182-0 | | SCREW | ｽｸﾘｭ | 1 | A,B,C,E,G,H,J,K |
| - | Z-1-15729-101-0 | | SCREW | ｽｸﾘｭ | 1 | D(FD70Z8,FD80Z8) |
| - | Z-1-15729-101-0 | | SCREW | ｽｸﾘｭ | 1 | D(FD100Z8) : E NO.-1393 |

# FIG. 32 GOVERNOR
ｶﾞﾊﾞﾅ

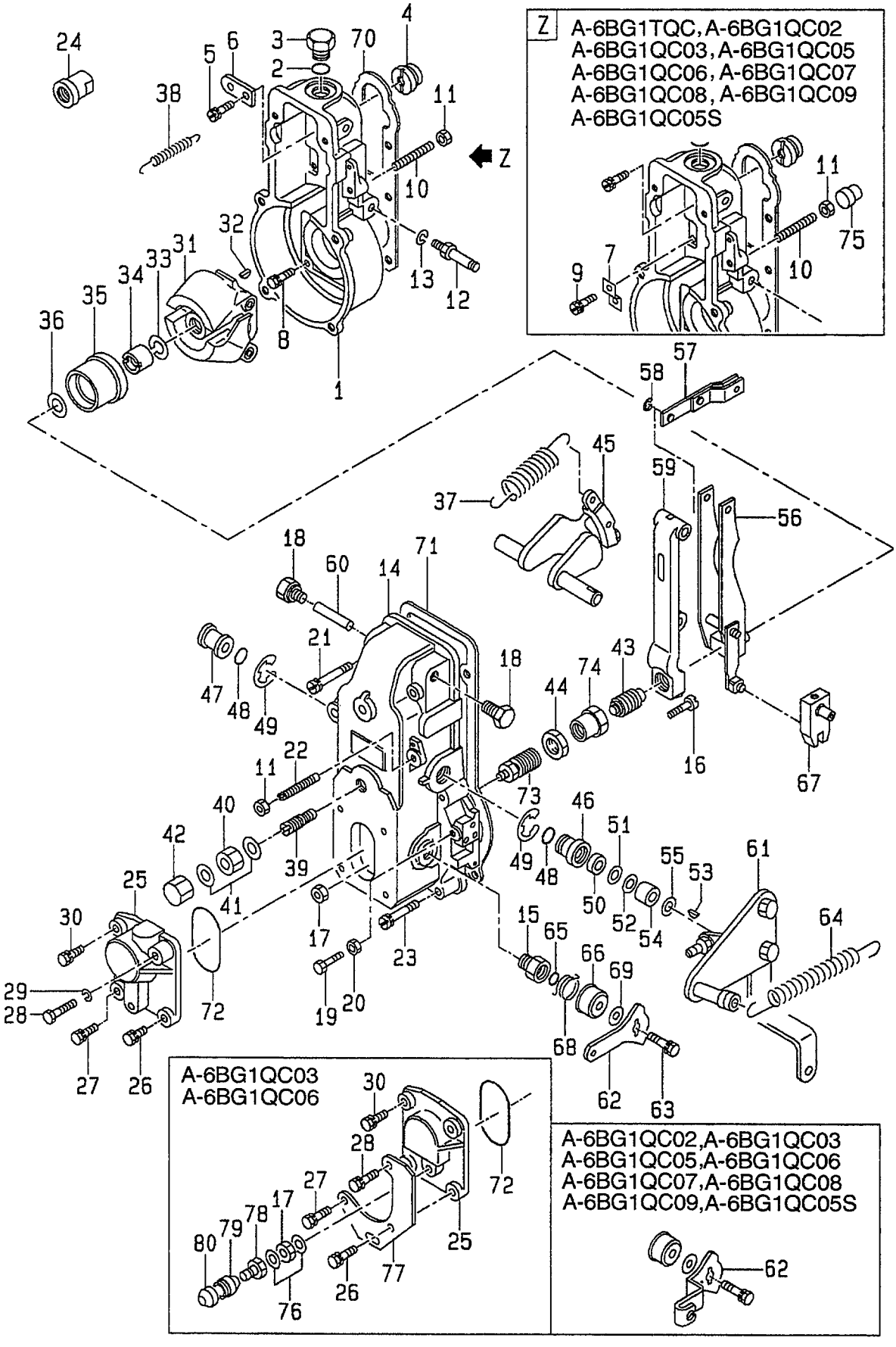

A: A-6BG1QC
B: A-6BG1TQC
C: A-6BG1QC02
D: A-6BG1QC03
E: A-6BG1QC05
F: A-6BG1QC06
G: A-6BG1QC07
H: A-6BG1QC08
J: A-6BG1QC09
K: A-6BG1QC05S

FIG. 32

| Item No. 見出番号 | Part No. 部品番号 | Mark 記号 | Description 部品名称 | | Req'd 個数 | Remarks : serial No. 備考：実施号車 |
|---|---|---|---|---|---|---|
| 16 | Z-1-15729-172-0 | | SCREW | ｽｸﾘｭ | 1 | D(FD100Z8) : E NO.1394- |
| - | Z-1-15729-172-0 | | SCREW | ｽｸﾘｭ | 1 | F |
| 17 | Z-9-81326-112-0 | | NUT | ﾅｯﾄ | 1 | A,B,C,E,G,H,J,K |
| - | Z-1-15779-040-0 | | NUT | ﾅｯﾄ | 1 | D,F |
| 18 | Z-5-15729-053-0 | | PLUG | ﾌﾟﾗｸﾞ | 2 | |
| 19 | Z-5-15729-102-0 | | BOLT | ﾎﾞﾙﾄ | 1 | A,B,C,E,G,H,J,K |
| 20 | Z-9-8841-0027-0 | | NUT | ﾅｯﾄ | 1 | A,B,C,E,G,H,J,K |
| 21 | Z-5-15729-054-0 | | BOLT | ﾎﾞﾙﾄ | 2 | |
| 22 | Z-9-81325-177-0 | | SCREW | ｽｸﾘｭ | 1 | A |
| - | Z-5-15729-123-0 | | SCREW | ｽｸﾘｭ | 1 | B,C,D,E,F,G,H,J,K |
| 23 | Z-5-15729-033-0 | | BOLT | ﾎﾞﾙﾄ | 4 | |
| 24 | Z-1-15729-636-0 | | LIMITER | ﾘﾐｯﾀ | 1 | |
| 25 | Z-5-15721-026-0 | | COVER | ｶﾊﾞｰ | 1 | A,B,C,E,G,H,J,K |
| - | Z-1-15721-023-0 | | COVER | ｶﾊﾞｰ | 1 | D(FD70Z8,FD80Z8) |
| - | Z-1-15721-023-0 | | COVER | ｶﾊﾞｰ | 1 | D(FD100Z8) : E NO.-1393 |
| - | Z-8-94167-793-0 | | COVER | ｶﾊﾞｰ | 1 | D(FD100Z8) : E NO.1394- |
| - | Z-8-94167-793-0 | | COVER | ｶﾊﾞｰ | 1 | F |
| 26 | Z-9-0190-0616-0 | | BOLT & WASHER | ﾎﾞﾙﾄ&ﾜｯｼｬ | 1 | A,B,C,E,G,H,J,K |
| - | Z-1-15619-282-0 | | BOLT | ﾎﾞﾙﾄ | 1 | D,F |
| 27 | Z-9-0190-0616-0 | | BOLT & WASHER | ﾎﾞﾙﾄ&ﾜｯｼｬ | 1 | A,B,C,E,G,H,J,K |
| - | Z-1-15619-282-0 | | BOLT | ﾎﾞﾙﾄ | 1 | D,F |
| 28 | Z-5-15729-124-0 | | BOLT | ﾎﾞﾙﾄ | 1 | A,B,C,E,G,H,J,K |
| - | Z-5-15729-167-0 | | BOLT | ﾎﾞﾙﾄ | 1 | D,F |
| 29 | Z-9-0915-0506-0 | | WASHER | ﾜｯｼｬ | 1 | A,B,C,E,G,H,J,K |
| 30 | Z-9-0190-0616-0 | | BOLT & WASHER | ﾎﾞﾙﾄ&ﾜｯｼｬ | 1 | |
| 31 | Z-5-15722-008-0 | | FLYWEIGHT | ﾌﾗｲｳｴｲﾄ | 1 | A,C,D,E,F,G,H,J,K |
| - | Z-1-15722-017-0 | | FLYWEIGHT | ﾌﾗｲｳｴｲﾄ | 1 | B |
| 32 | Z-5-19619-049-0 | | KEY | ｷｰ | 1 | |
| 33 | Z-5-15729-034-0 | | WASHER,LOCK | ﾜｯｼｬ | 1 | |
| 34 | Z-9-81325-086-0 | | NUT | ﾅｯﾄ | 1 | |
| 35 | Z-5-15719-008-0 | | SLEEVE | ｽﾘｰﾌﾞ | 1 | |
| 36 | Z-9-81325-088-0 | | SHIM | ｼﾑ | AR | t=0.20mm |
| - | Z-9-81325-551-0 | | SHIM | ｼﾑ | AR | t=0.30mm |
| - | Z-9-81325-552-0 | | SHIM | ｼﾑ | AR | t=0.40mm |
| - | Z-9-81325-553-0 | | SHIM | ｼﾑ | AR | t=1.00mm |
| - | Z-5-15729-286-0 | | SHIM | ｼﾑ | AR | t=0.50mm |
| - | Z-5-15729-287-0 | | SHIM | ｼﾑ | AR | t=1.50mm |
| - | Z-1-15729-891-0 | | SHIM | ｼﾑ | AR | t=2.00mm |
| - | Z-1-15729-892-0 | | SHIM | ｼﾑ | AR | t=3.00mm |
| - | Z-1-15729-893-0 | | SHIM | ｼﾑ | AR | t=4.00mm |
| 37 | Z-5-15723-128-0 | | SPRING | ｽﾌﾟﾘﾝｸﾞ | 1 | A |
| - | Z-8-97039-537-0 | | SPRING | ｽﾌﾟﾘﾝｸﾞ | 1 | C,D,E,F,G,H,J,K |
| 38 | Z-9-81322-235-0 | | SPRING | ｽﾌﾟﾘﾝｸﾞ | 1 | A |
| - | Z-5-15723-160-0 | | SPRING | ｽﾌﾟﾘﾝｸﾞ | 1 | B,C,D,E,F,G,H,J,K |
| 39 | Z-1-15631-026-0 | | CAPSULE,SPRING | ｶﾌﾟｾﾙ | 1 | A |
| - | Z-1-15723-284-0 | | CAPSULE,SPRING | ｶﾌﾟｾﾙ | 1 | B |
| - | Z-1-15723-224-0 | | CAPSULE | ｶﾌﾟｾﾙ | 1 | C,D,E,F,G,H,J,K |
| 40 | Z-1-15729-689-0 | | NUT | ﾅｯﾄ | 1 | A,C,D,E,F,G,H,J,K |
| - | Z-5-15729-209-0 | | NUT | ﾅｯﾄ | 1 | B |
| 41 | Z-8-94144-588-0 | | GASKET | ｶﾞｽｹｯﾄ | 2 | |

# FIG. 32 GOVERNOR
ｶﾞﾊﾞﾅ

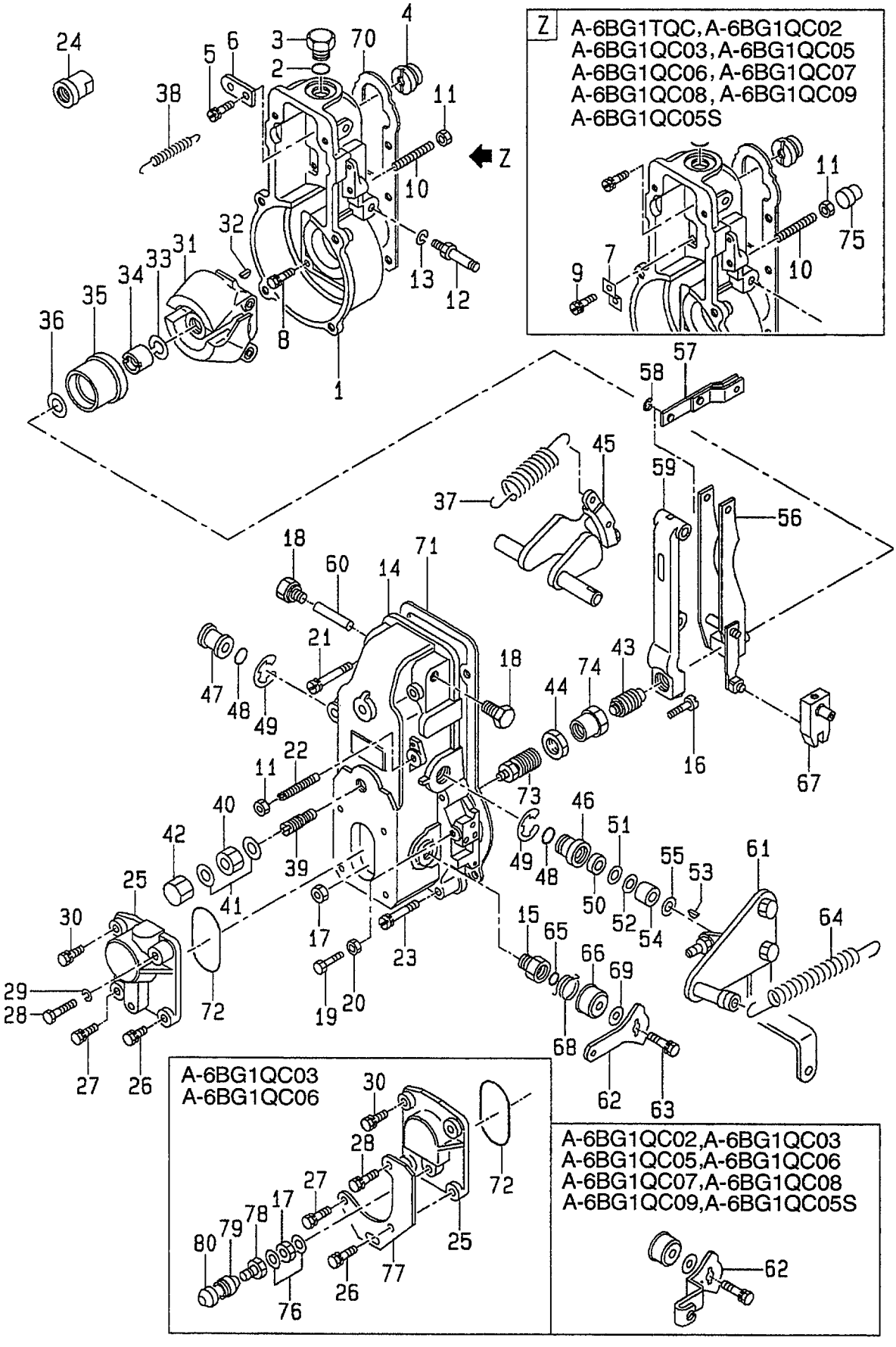

A: A-6BG1QC
B: A-6BG1TQC
C: A-6BG1QC02
D: A-6BG1QC03
E: A-6BG1QC05
F: A-6BG1QC06
G: A-6BG1QC07
H: A-6BG1QC08
J: A-6BG1QC09
K: A-6BG1QC05S

**FIG. 32**

| Item No. 見出番号 | Part No. 部品番号 | Mark 記号 | Description 部品名称 | | Req'd 個数 | Remarks : serial No. 備考：実施号車 |
|---|---|---|---|---|---|---|
| 42 | Z-1-15729-092-0 | | NUT,CAP | ﾅｯﾄ | 1 | |
| 43 | Z-1-15723-186-0 | | CAPSULE,SPRING | ｶﾌﾟｾﾙ | 1 | A,C,D,E,F,G,H,J,K |
| - | Z-1-15729-279-0 | | CAPSULE,SPRING | ｶﾌﾟｾﾙ | 1 | B |
| 44 | Z-9-8841-0037-0 | | NUT | ﾅｯﾄ | 1 | A,B |
| - | Z-9-00813-023-0 | | NUT | ﾅｯﾄ | 1 | C,D,E,F,G,H,J,K |
| 45 | Z-8-97024-238-0 | | LEVER,SWIVEL | ﾚﾊﾞｰ | 1 | |
| 46 | Z-8-97024-239-0 | | BUSHING | ﾌﾞｯｼﾝｸﾞ | 1 | |
| 47 | Z-8-97024-240-0 | | BUSHING | ﾌﾞｯｼﾝｸﾞ | 1 | |
| 48 | Z-9-81321-205-0 | | O RING | Oﾘﾝｸﾞ | 2 | |
| 49 | Z-9-0918-5415-0 | | RING,SNAP | ﾘﾝｸﾞ | 2 | |
| 50 | Z-1-15729-098-0 | | SEAL,OIL | ｼｰﾙ | 1 | |
| 51 | Z-1-15729-099-0 | | SHIM | ｼﾑ | 1 | t=0.1mm |
| 52 | Z-9-81325-097-0 | | SHIM | ｼﾑ | AR | A,B |
| - | Z-9-81325-173-0 | | SHIM | ｼﾑ | AR | C,D,E,F,G,H,J,K |
| 53 | Z-9-81325-030-0 | | KEY | ｷｰ | 1 | |
| 54 | Z-1-15729-301-0 | | COLLAR | ｶﾗｰ | 1 | |
| 55 | Z-9-81325-488-0 | | WASHER | ﾜｯｼｬ | AR | |
| 56 | Z-5-15725-057-0 | | LEVER,GUIDE | ﾚﾊﾞｰ | 1 | |
| 57 | Z-1-15725-011-0 | | LINK | ﾘﾝｸ | 1 | |
| 58 | Z-9-0918-5404-0 | | RING,SNAP | ﾘﾝｸﾞ | 1 | |
| 59 | Z-5-15725-050-0 | | LEVER,TENSION | ﾚﾊﾞｰ | 1 | A,C,D,E,F,G,H,J,K |
| - | Z-8-97063-823-0 | | LEVER,TENSION | ﾚﾊﾞｰ | 1 | B |
| 60 | Z-9-81325-062-0 | | PIN | ﾋﾟﾝ | 1 | |
| 61 | Z-8-97138-535-0 | | LEVER | ﾚﾊﾞｰ | 1 | A |
| - | Z-1-15725-344-0 | | LEVER | ﾚﾊﾞｰ | 1 | B |
| - | Z-1-15725-917-0 | | LEVER | ﾚﾊﾞｰ | 1 | C,D,E,F,G,H,J,K |
| 62 | Z-5-15725-122-0 | | LEVER | ﾚﾊﾞｰ | 1 | A,B |
| - | Z-1-15725-449-0 | | LEVER | ﾚﾊﾞｰ | 1 | C,D,E,F,G,H,J,K |
| 63 | Z-9-0190-0616-0 | | BOLT & WASHER | ﾎﾞﾙﾄ&ﾜｯｼｬ | 1 | |
| 64 | Z-1-15723-028-0 | | SPRING | ｽﾌﾟﾘﾝｸﾞ | 1 | A |
| - | Z-5-15723-088-0 | | SPRING | ｽﾌﾟﾘﾝｸﾞ | 1 | B |
| - | Z-1-15723-223-0 | | SPRING | ｽﾌﾟﾘﾝｸﾞ | 1 | C,D,E,F,G,H,J,K |
| 65 | Z-9-8139-1906-0 | | O RING | Oﾘﾝｸﾞ | 1 | |
| 66 | Z-9-81325-210-0 | | CAP | ｷｬｯﾌﾟ | 1 | |
| 67 | Z-5-15725-042-0 | | LEVER | ﾚﾊﾞｰ | 1 | |
| 68 | Z-1-15723-212-0 | | SPRING | ｽﾌﾟﾘﾝｸﾞ | 1 | |
| 69 | Z-1-15729-294-0 | | SHIM | ｼﾑ | AR | t=0.20mm |
| - | Z-1-15729-295-0 | | SHIM | ｼﾑ | AR | t=0.25mm |
| - | Z-1-15729-296-0 | | SHIM | ｼﾑ | AR | t=0.30mm |
| - | Z-1-15729-297-0 | | SHIM | ｼﾑ | AR | t=0.35mm |
| - | Z-1-15729-298-0 | | SHIM | ｼﾑ | AR | t=0.40mm |
| - | Z-1-15729-299-0 | | SHIM | ｼﾑ | AR | t=0.50mm |
| 70 | Z-1-15729-001-0 | | GASKET | ｶﾞｽｹｯﾄ | 1 | A |
| - | Z-1-15779-093-0 | | GASKET | ｶﾞｽｹｯﾄ | 1 | B,C,D,E,F,G,H,J,K |
| 71 | Z-1-15729-002-0 | | GASKET | ｶﾞｽｹｯﾄ | 1 | A |
| - | Z-1-15779-094-0 | | GASKET | ｶﾞｽｹｯﾄ | 1 | B,C,D,E,F,G,H,J,K |
| 72 | Z-9-8139-1907-0 | | O RING | Oﾘﾝｸﾞ | 1 | |
| 73 | Z-1-15723-369-0 | | CAPSULE,SPRING | ｶﾌﾟｾﾙ | 1 | A |
| - | Z-1-15723-432-0 | | CAPSULE,SPRING | ｶﾌﾟｾﾙ | 1 | B |
| 74 | Z-9-00813-023-0 | | NUT | ﾅｯﾄ | 1 | A,B |

# FIG. 32 GOVERNOR
ｶﾞﾊﾞﾅ

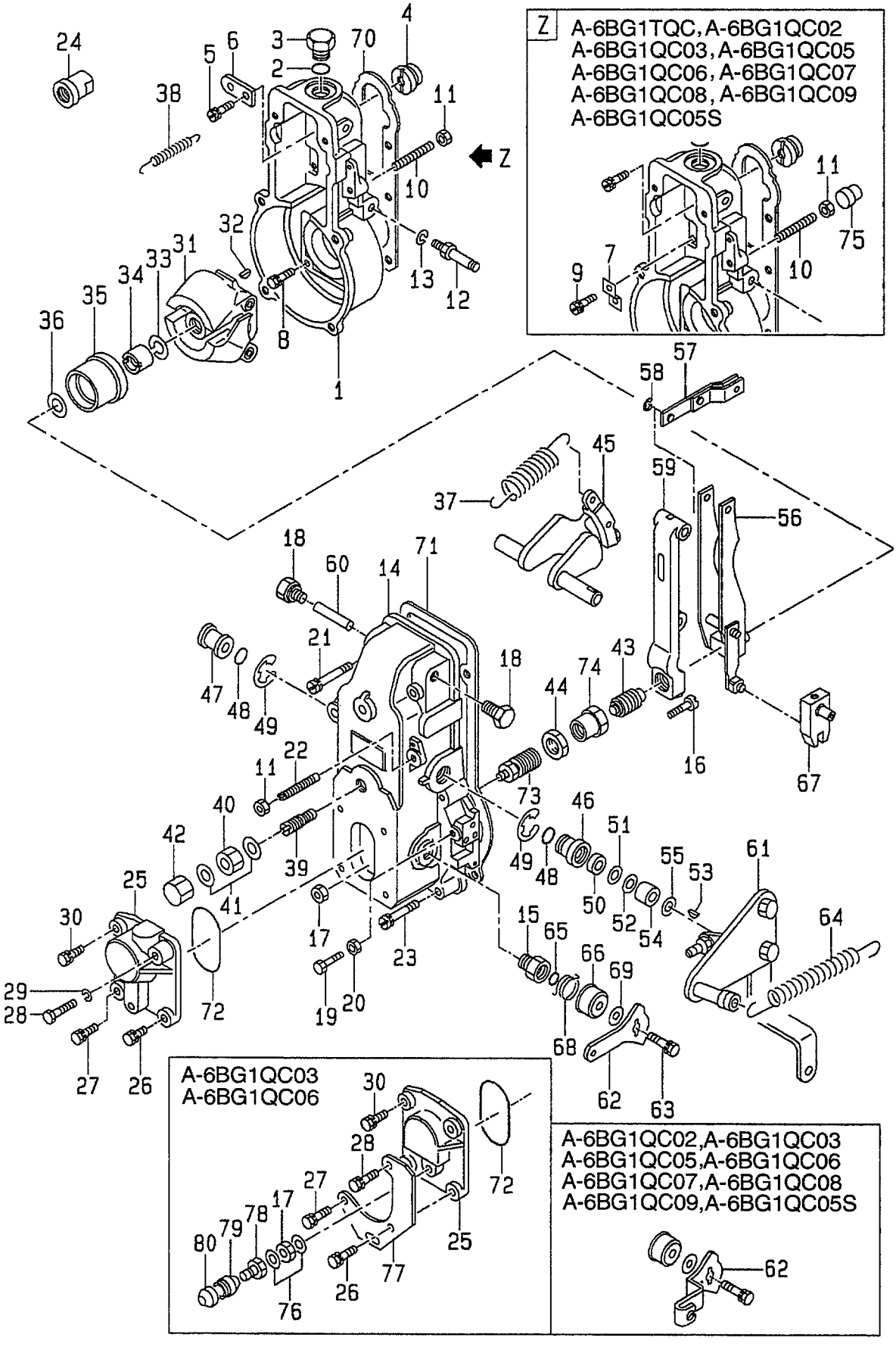

A: A-6BG1QC
B: A-6BG1TQC
C: A-6BG1QC02
D: A-6BG1QC03
E: A-6BG1QC05
F: A-6BG1QC06
G: A-6BG1QC07
H: A-6BG1QC08
J: A-6BG1QC09
K: A-6BG1QC05S

**FIG. 32**

| Item No. 見出番号 | Part No. 部品番号 | Mark 記号 | Description 部品名称 | | Req'd 個数 | Remarks : serial No. 備考：実施号車 |
|---|---|---|---|---|---|---|
| 75 | Z-8-97085-022-0 | | CAP | ｷｬｯﾌﾟ | 1 | B |
| - | Z-8-97179-670-0 | | CAP | ｷｬｯﾌﾟ | 1 | D,F |
| 76 | Z-5-15729-099-0 | | GASKET | ｶﾞｽｹｯﾄ | 2 | D,F |
| 77 | Z-1-15779-191-0 | | BRACKET | ﾌﾞﾗｹｯﾄ | 1 | D,F |
| 78 | Z-1-15779-564-0 | | NUT,CAP | ﾅｯﾄ | 1 | D,F |
| 79 | Z-1-15779-567-0 | | ADAPTER | ｱﾀﾞﾌﾟﾀ | 1 | D,F |
| 80 | Z-1-15779-565-0 | | CAP | ｷｬｯﾌﾟ | 1 | D,F |

## FIG. 33 FEED PUMP
フィードポンプ

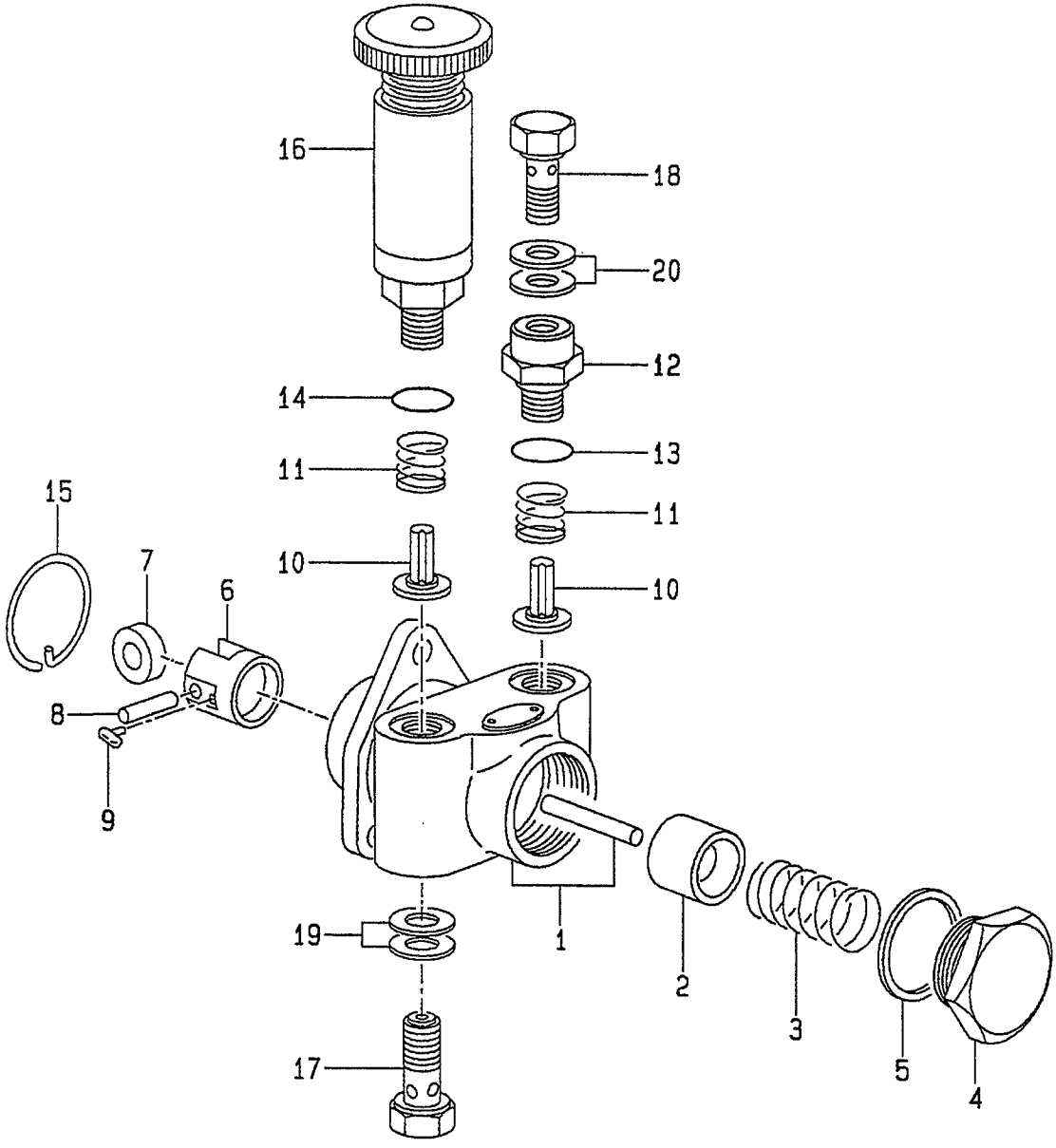

A: A-6BG1QC
B: A-6BG1TQC
C: A-6BG1QC02
D: A-6BG1QC03
E: A-6BG1QC05
F: A-6BG1QC06
G: A-6BG1QC07
H: A-6BG1QC08
J: A-6BG1QC09
K: A-6BG1QC05S

**FIG. 33**

| Item No. 見出番号 | Part No. 部品番号 | Mark 記号 | Description 部品名称 | | Req'd 個数 | Remarks : serial No. 備考：実施号車 |
|---|---|---|---|---|---|---|
| A1 | Z-1-15750-162-0 | | FEED PUMP ASSY | ﾌｨｰﾄﾞﾎﾟﾝﾌﾟｱｯｾﾝ | 1 | A,C,D,E,F,G,H,J,K |
| | | | | | | INC.1-20 |
| A2 | Z-1-15750-154-0 | | FEED PUMP ASSY | ﾌｨｰﾄﾞﾎﾟﾝﾌﾟｱｯｾﾝ | 1 | B |
| | | | | | | INC.1-20 |
| 1 | Z-5-15751-012-0 | | HOUSING | ﾊｳｼﾞﾝｸﾞ | 1 | A,C,D,E,F,G,H,J,K |
| - | Z-1-15751-012-0 | | HOUSING | ﾊｳｼﾞﾝｸﾞ | 1 | B |
| 2 | Z-9-8135-1205-0 | | PISTON | ﾋﾟｽﾄﾝ | 1 | |
| 3 | Z-9-8135-1302-0 | | SPRING,PISTON | ｽﾌﾟﾘﾝｸﾞ | 1 | |
| 4 | Z-8-94171-185-0 | | PLUG | ﾌﾟﾗｸﾞ | 1 | |
| 5 | Z-9-8135-5035-0 | | GASKET | ｶﾞｽｹｯﾄ | 1 | A,C,D,E,F,G,H,J,K |
| - | Z-1-15759-042-0 | | GASKET | ｶﾞｽｹｯﾄ | 1 | B |
| 6 | Z-5-15754-001-0 | | TAPPET | ﾀﾍﾟｯﾄ | 1 | A,C,D,E,F,G,H,J,K |
| | | | | | | INC.7-9 |
| - | Z-1-15754-002-0 | | TAPPET | ﾀﾍﾟｯﾄ | 1 | B |
| | | | | | | INC.7-9 |
| 7 | Z-9-8135-1403-0 | | ROLLER | ﾛｰﾗ | 1 | A,C,D,E,F,G,H,J,K |
| - | Z-1-15759-043-0 | | ROLLER | ﾛｰﾗ | 1 | B |
| 8 | Z-9-8135-1410-0 | | PIN | ﾋﾟﾝ | 1 | A,C,D,E,F,G,H,J,K |
| - | Z-9-8135-1406-0 | | PIN | ﾋﾟﾝ | 1 | B |
| 9 | Z-1-15759-002-0 | | GUIDE | ｶﾞｲﾄﾞ | 2 | A,C,D,E,F,G,H,J,K |
| - | Z-9-8135-1416-0 | | GUIDE | ｶﾞｲﾄﾞ | 2 | B |
| 10 | Z-1-15755-002-0 | | VALVE | ﾊﾞﾙﾌﾞ | 2 | |
| 11 | Z-9-8135-1702-0 | | SPRING | ｽﾌﾟﾘﾝｸﾞ | 2 | |
| 12 | Z-1-15759-003-0 | | ADAPTER | ｱﾀﾞﾌﾟﾀ | 1 | |
| 13 | Z-1-19623-016-0 | | O RING | Oﾘﾝｸﾞ | 1 | |
| 14 | Z-1-19623-016-0 | | O RING | Oﾘﾝｸﾞ | 1 | |
| 15 | Z-9-8135-5025-0 | | RING,SNAP | ﾘﾝｸﾞ | 1 | |
| 16 | Z-1-15761-006-0 | | PUMP,PRIMING | ﾎﾟﾝﾌﾟ | 1 | |
| 17 | Z-1-09675-063-0 | | BOLT,EYE | ﾎﾞﾙﾄ | 1 | A,C,D,E,F,G,H,J,K |
| - | Z-1-15759-029-0 | | BOLT,EYE | ﾎﾞﾙﾄ | 1 | B |
| 18 | Z-1-15759-011-0 | | BOLT,EYE | ﾎﾞﾙﾄ | 1 | |
| 19 | Z-1-09630-085-0 | | PACKING | ﾊﾟｯｷﾝｸﾞ | 2 | |
| 20 | Z-1-09630-085-0 | | PACKING | ﾊﾟｯｷﾝｸﾞ | 2 | |

## FIG. 34 COUPLING
カップリング

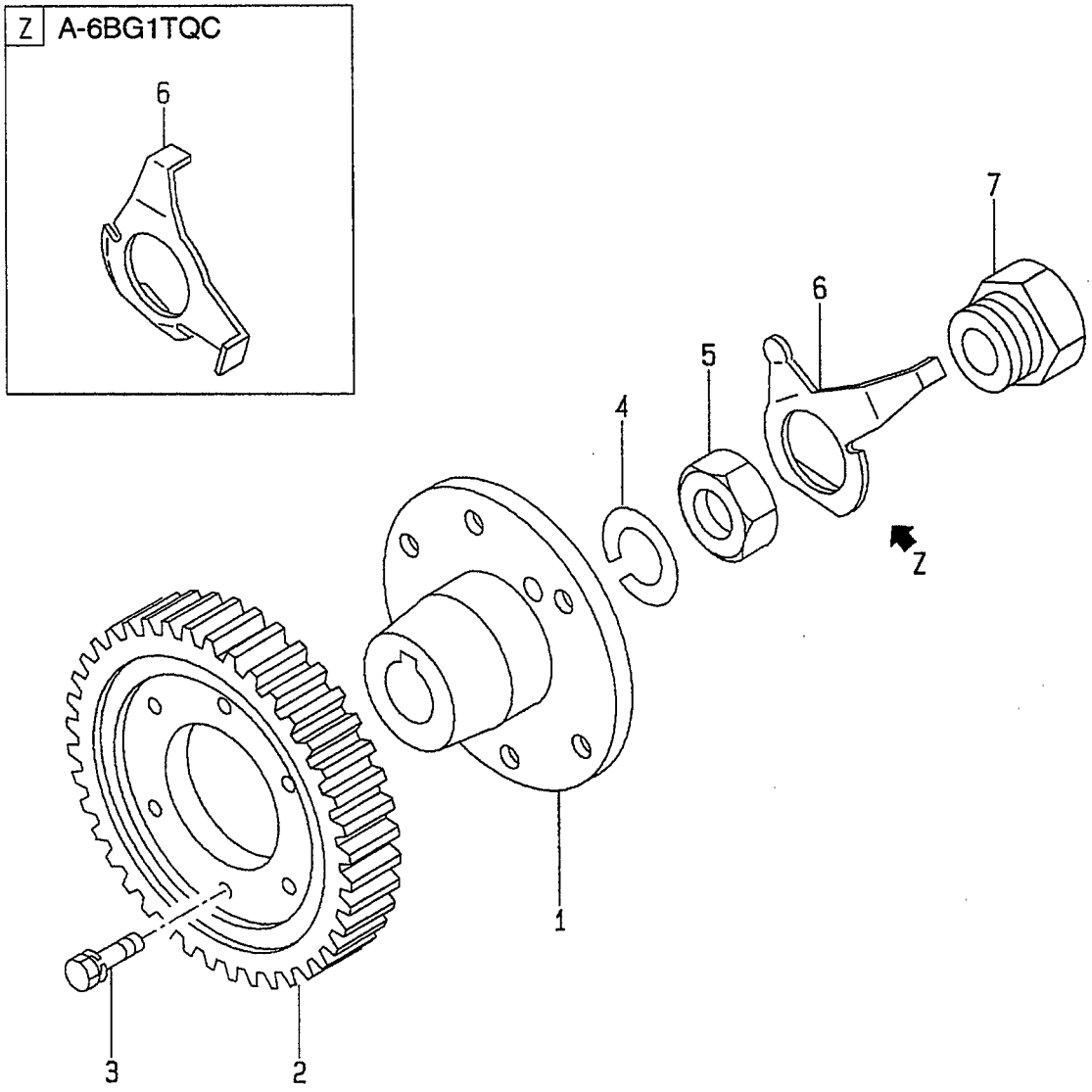

A: A-6BG1QC
B: A-6BG1TQC
C: A-6BG1QC02
D: A-6BG1QC03
E: A-6BG1QC05
F: A-6BG1QC06
G: A-6BG1QC07
H: A-6BG1QC08
J: A-6BG1QC09
K: A-6BG1QC05S

**FIG. 34**

| Item No. 見出番号 | Part No. 部品番号 | Mark 記号 | Description 部品名称 | | Req'd 個数 | Remarks : serial No. 備考：実施号車 |
|---|---|---|---|---|---|---|
| A1 | Z-1-15780-172-0 | | COUPLING ASSY | ｶｯﾌﾟﾘﾝｸﾞｱｯｾﾝ | 1 | A,C,D,E,F,G,H,J,K |
| | | | | | | INC.1-7 |
| A2 | Z-1-15780-168-0 | | COUPLING ASSY | ｶｯﾌﾟﾘﾝｸﾞｱｯｾﾝ | 1 | B |
| | | | | | | INC.1-7 |
| 1 | Z-5-15781-003-0 | | COUPLING | ｶｯﾌﾟﾘﾝｸﾞ | 1 | A,C,D,E,F,G,H,J,K |
| - | Z-1-15781-016-0 | | COUPLING | ｶｯﾌﾟﾘﾝｸﾞ | 1 | B |
| 2 | Z-1-12524-015-0 | | GEAR | ｷﾞﾔｰ | 1 | A,C,D,E,F,G,H,J,K |
| - | Z-5-12524-077-0 | | GEAR | ｷﾞﾔｰ | 1 | B |
| 3 | Z-8-94457-517-0 | | BOLT | ﾎﾞﾙﾄ | 6 | |
| 4 | Z-5-15619-048-0 | | WASHER | ﾜｯｼｬ | 1 | A,C,D,E,F,G,H,J,K |
| - | Z-9-8841-0264-0 | | WASHER | ﾜｯｼｬ | 1 | B |
| 5 | Z-9-8841-0502-0 | | NUT | ﾅｯﾄ | 1 | A,C,D,E,F,G,H,J,K |
| 6 | Z-1-15619-247-0 | | PLATE,LOCK | ﾌﾟﾚｰﾄ | 1 | A,C,D,E,F,G,H,J,K |
| - | Z-1-15619-246-0 | | PLATE,LOCK | ﾌﾟﾚｰﾄ | 1 | B |
| 7 | Z-9-09662-007-0 | | BOLT | ﾎﾞﾙﾄ | 1 | |
| 8 | Z-1-15789-094-0 | + | BOLT | ﾎﾞﾙﾄ | 1 | B |

# FIG. 35 STARTER & GENERATOR MOUNT
スタータ&ジェネレータマウント

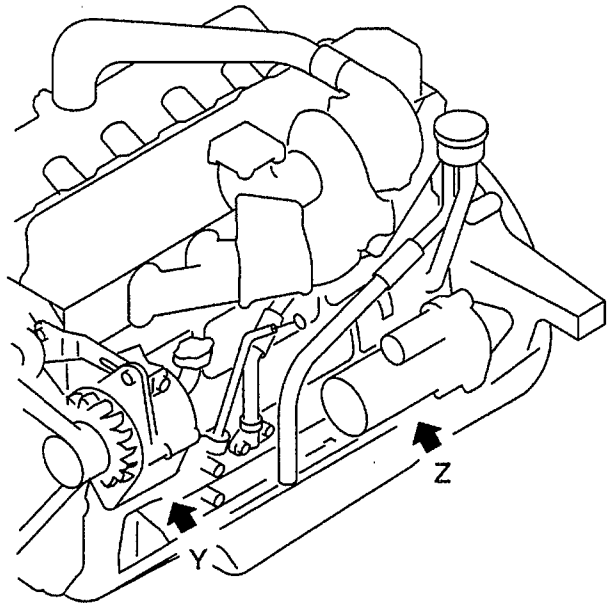


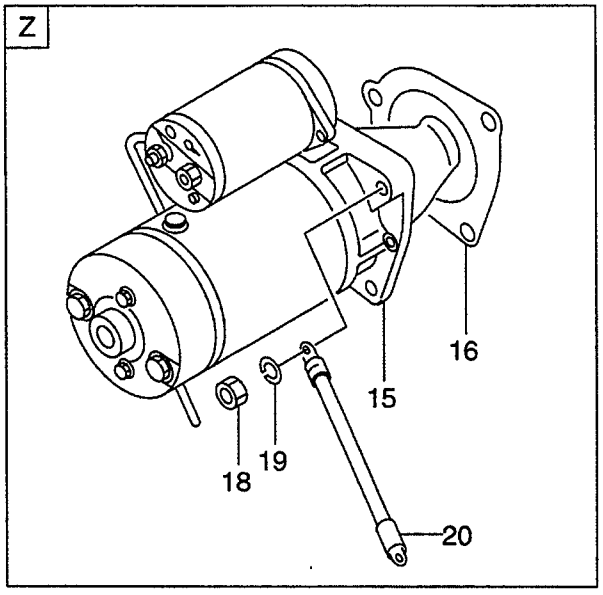


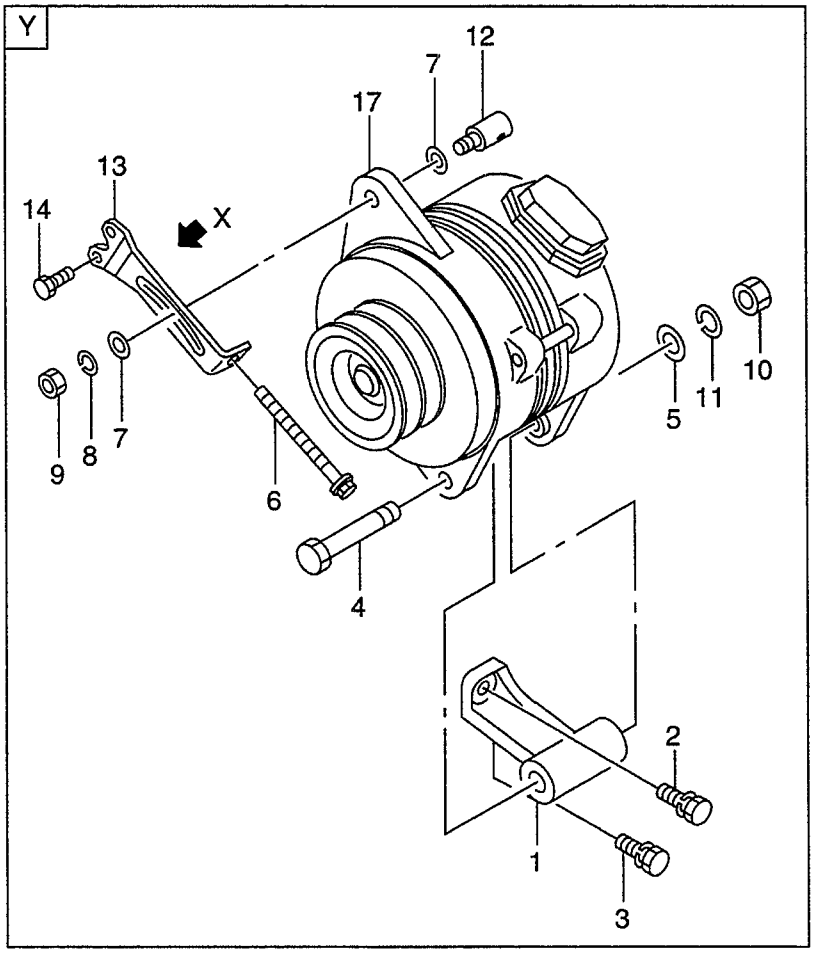


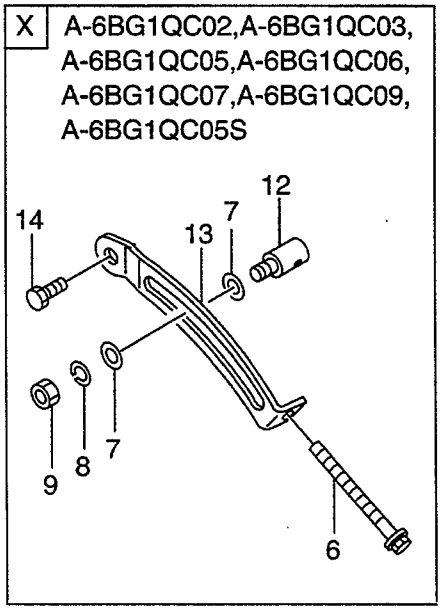

A: A-6BG1QC
B: A-6BG1TQC
C: A-6BG1QC02
D: A-6BG1QC03
E: A-6BG1QC05
F: A-6BG1QC06
G: A-6BG1QC07
H: A-6BG1QC08
J: A-6BG1QC09
K: A-6BG1QC05S

# FIG. 35

| Item No. 見出番号 | Part No. 部品番号 | Mark 記号 | Description 部品名称 | | Req'd 個数 | Remarks : serial No. 備考：実施号車 |
|---|---|---|---|---|---|---|
| 1 | Z-5-19711-031-2 | | BRACKET | ﾌﾞﾗｹｯﾄ | 1 | |
| 2 | Z-0-5004-1025-0 | | BOLT | ﾎﾞﾙﾄ | 1 | A & B<br>-1997.7 |
| - | Z-0-2808-1025-0 | | BOLT | ﾎﾞﾙﾄ | 1 | A & B<br>1997.8- |
| - | Z-0-2808-1025-0 | | BOLT | ﾎﾞﾙﾄ | 1 | C,D,E,F,G,H,J,K |
| 3 | Z-0-5004-1035-0 | | BOLT | ﾎﾞﾙﾄ | 2 | A & B<br>-1997.7 |
| - | Z-0-2868-1035-0 | | BOLT | ﾎﾞﾙﾄ | 2 | A & B<br>1997.8- |
| - | Z-0-2868-1035-0 | | BOLT | ﾎﾞﾙﾄ | 2 | C,D,E,F,G,H,J,K |
| 4 | Z-1-09000-133-1 | | BOLT | ﾎﾞﾙﾄ | 1 | |
| 5 | Z-9-0916-0514-0 | | WASHER | ﾜｯｼｬ | 1 | |
| 6 | 530C2-72131 | | BOLT | ﾎﾞﾙﾄ | 1 | |
| 7 | Z-9-0916-0712-0 | | WASHER | ﾜｯｼｬ | 2 | |
| 8 | Z-9-0915-0512-0 | | WASHER | ﾜｯｼｬ | 1 | |
| 9 | Z-9-9911-0412-0 | | NUT | ﾅｯﾄ | 1 | |
| 10 | Z-9-9911-0414-0 | | NUT | ﾅｯﾄ | 1 | |
| 11 | Z-9-0915-0514-0 | | WASHER | ﾜｯｼｬ | 1 | |
| 12 | 530C2-72121 | | PIECE,SLIDING | ﾋﾟｰｽ | 1 | |
| 13 | 530C2-72111 | | PLATE,ADJUSTER | ﾌﾟﾚｰﾄ | 1 | A,B,D,H |
| - | Z-1-13674-118-1 | | PLATE,ADJUSTER | ﾌﾟﾚｰﾄ | 1 | C,E,F,G,J,K |
| 14 | Z-0-5004-1040-0 | | BOLT | ﾎﾞﾙﾄ | 2 | A & B<br>-1997.7 |
| - | Z-0-2868-1040-0 | | BOLT | ﾎﾞﾙﾄ | 2 | A & B<br>1997.8- |
| - | Z-0-2868-1025-0 | | BOLT | ﾎﾞﾙﾄ | 1 | C,D,E,F,G,J,K |
| - | Z-0-2868-1040-0 | | BOLT | ﾎﾞﾙﾄ | 2 | H |
| 15 | Z-1-81100-191-1 | | STARTER | ｽﾀｰﾀ | 1 | A,B<br>NIKKO MAKE<br>SEE FIG.36 |
| - | Z-1-81100-343-1 | | STARTER | ｽﾀｰﾀ | 1 | A,B<br>HITACHI MAKE<br>SEE NO.37 |
| - | Z-1-81100-141-1 | | STARTER | ｽﾀｰﾀ | 1 | C,D,E,F,H,J,K<br>SEE FIG.38 |
| - | Z-1-81100-206-1 | | STARTER | ｽﾀｰﾀ | 1 | G:-108900<br>NIKKO MAKE<br>SEE FIG.39 |
| - | Z-1-81100-408-0 | | STARTER | ｽﾀｰﾀ | 1 | G<br>1999.7-1999.8<br>DENSO MAKE |
| - | Z-1-81100-404-0 | | STARTER | ｽﾀｰﾀ | 1 | G:108901-<br>NIKKO MAKE<br>SEE FIG.39A |
| 16 | Z-1-09623-660-0 | | GASKET | ｶﾞｽｹｯﾄ | 1 | G:108901- |
| 17 | 530C2-72101 | | GENERATOR | ｼﾞｪﾈﾚｰﾀ | 1 | A,B,D,H<br>NIKKO MAKE<br>24V-40A(GE)<br>SEE FIG.40 |

# FIG. 35 STARTER & GENERATOR MOUNT
スタータ&ジェネレータマウント

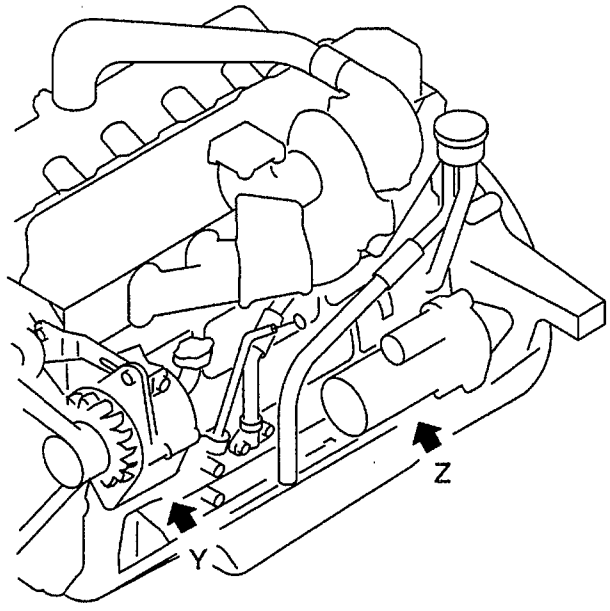


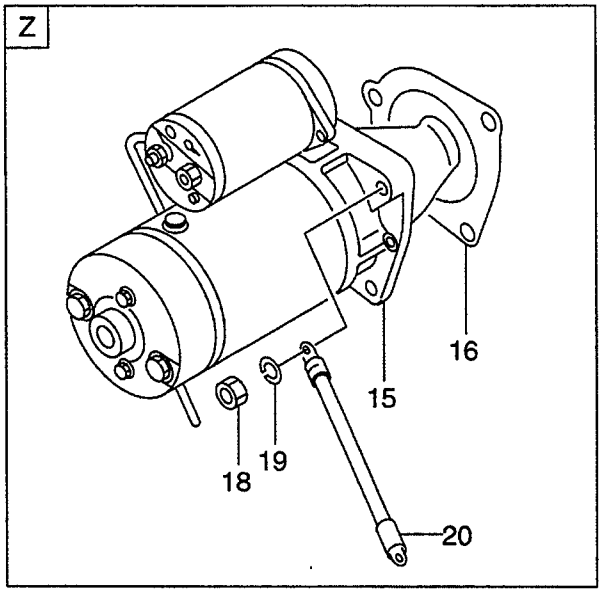


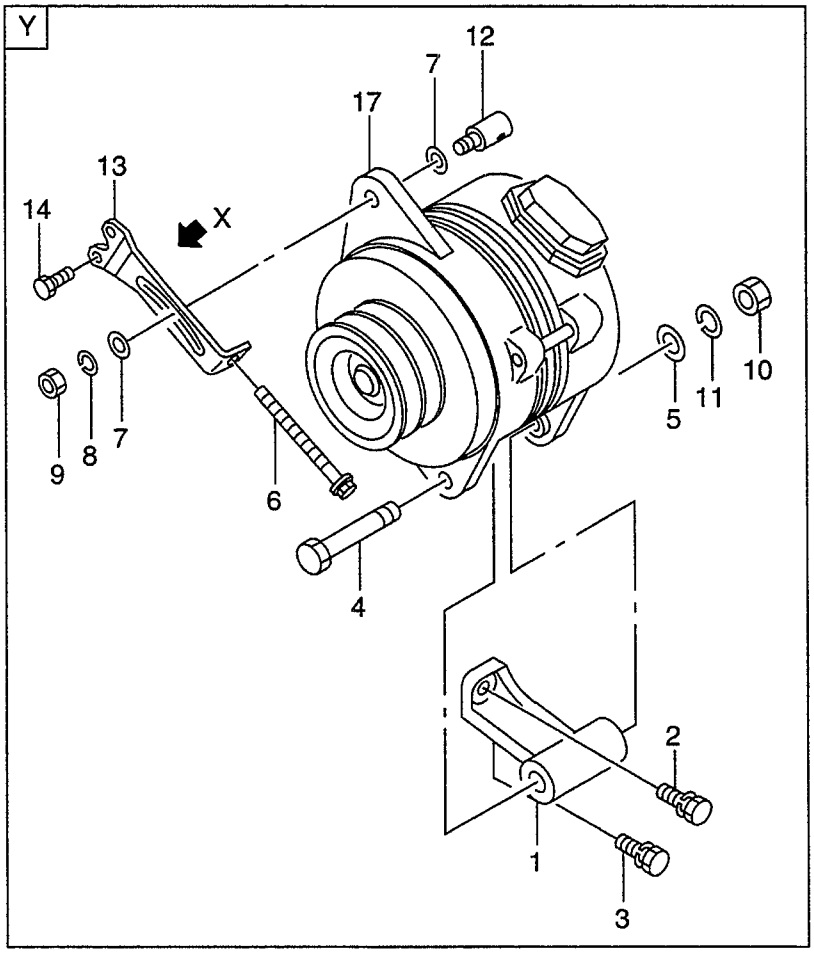


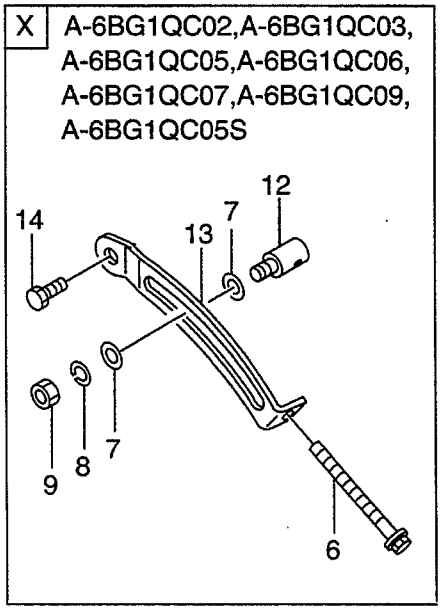

A: A-6BG1QC
B: A-6BG1TQC
C: A-6BG1QC02
D: A-6BG1QC03
E: A-6BG1QC05
F: A-6BG1QC06
G: A-6BG1QC07
H: A-6BG1QC08
J: A-6BG1QC09
K: A-6BG1QC05S

**FIG. 35**

| Item No. 見出番号 | Part No. 部品番号 | Mark 記号 | Description 部品名称 | | Req'd 個数 | Remarks : serial No. 備考：実施号車 |
|---|---|---|---|---|---|---|
| 17 | Z-1-81200-525-1 | | GENERATOR | ｼﾞｪﾈﾚｰﾀ | 1 | A & B & H<br>1999.5-<br>MITSUBISHI MAKE |
| - | Z-1-81200-365-0 | | GENERATOR | ｼﾞｪﾈﾚｰﾀ | 1 | C,E,F,G,J,K<br>NIKKO MAKE<br>24V-25A<br>SEE FIG.41 |
| - | Z-1-81200-512-0 | | GENERATOR | ｼﾞｪﾈﾚｰﾀ | 1 | C,E,F,G,J,K<br>HITACHI MAKE<br>SEE FIG.42 |
| 18 | Z-9-9911-0412-0 | | NUT | ﾅｯﾄ | 3 | |
| 19 | Z-9-0915-0512-0 | | WASHER | ﾜｯｼｬ | 3 | |
| 20 | Z-9-8293-2211-0 | | CABLE,EARTH | ｹｰﾌﾞﾙ | 1 | |

## FIG. 36 STARTER (INNER PARTS) (NIKKO MAKE) (A,B)
スタータ(インナパーツ)

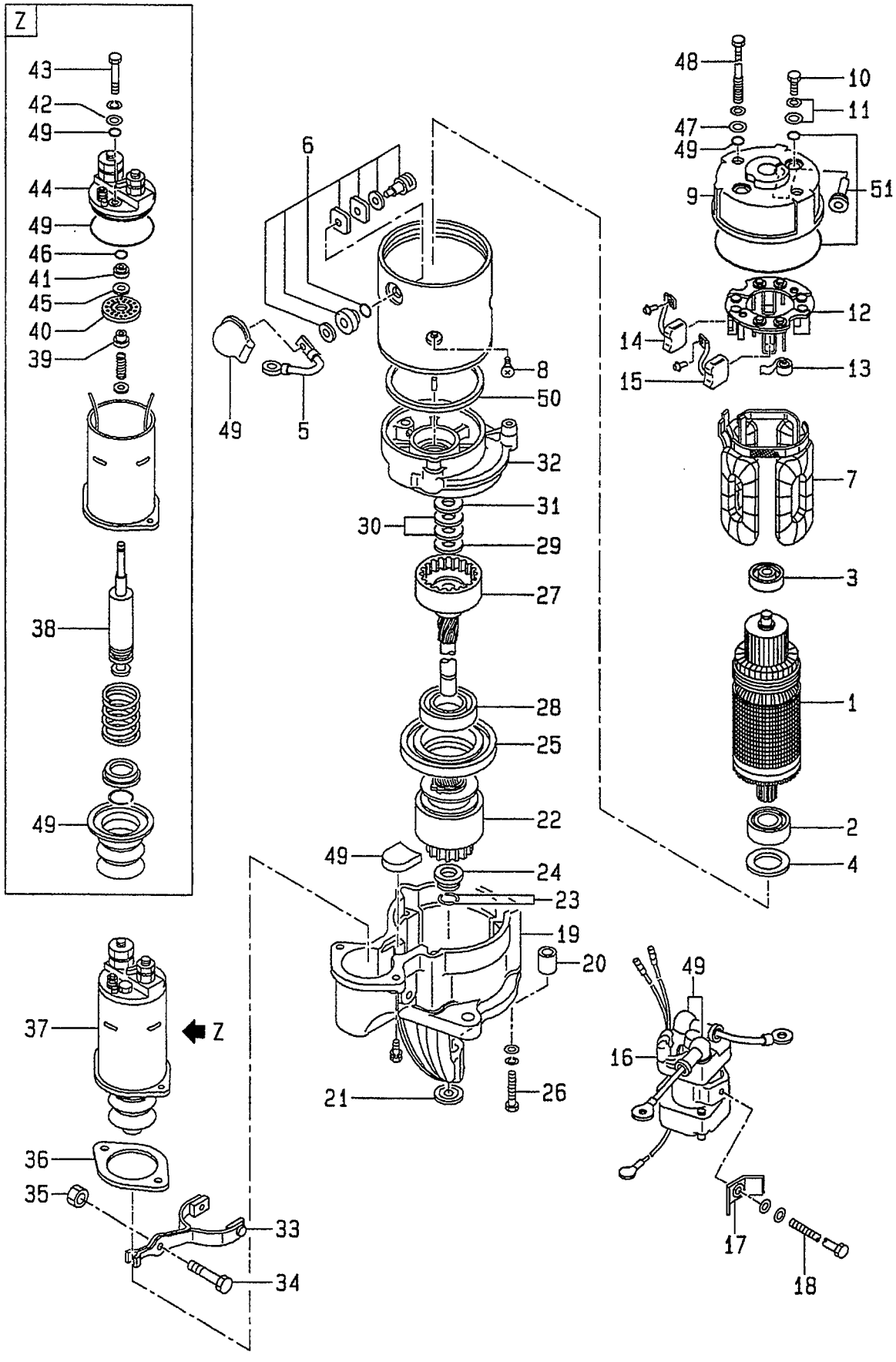

A: A-6BG1QC
B: A-6BG1TQC
C: A-6BG1QC02
D: A-6BG1QC03
E: A-6BG1QC05
F: A-6BG1QC06
G: A-6BG1QC07
H: A-6BG1QC08
J: A-6BG1QC09
K: A-6BG1QC05S

**FIG. 36**

| Item No. 見出番号 | Part No. 部品番号 | Mark 記号 | Description 部品名称 | | Req'd 個数 | Remarks : serial No. 備考：実施号車 |
|---|---|---|---|---|---|---|
| A1 | Z-1-81100-191-1 | | STARTER ASSY | ｽﾀｰﾀｱｯｾﾝ | 1 | A,B |
| | | | | | | INC.1-52 |
| 1 | Z-1-81121-037-0 | | ARMATURE | ｱｰﾏﾁｭｱ | 1 | A,B |
| | | | | | | INC.2,3 |
| 2 | Z-1-81129-395-0 | | BEARING,BALL | ﾍﾞｱﾘﾝｸﾞ | 1 | A & B |
| | | | | | | -1995.3 |
| - | Z-5-81129-155-0 | | BEARING,BALL | ﾍﾞｱﾘﾝｸﾞ | 1 | A & B |
| | | | | | | 1995.4- |
| 3 | Z-1-81129-385-0 | | BEARING,BALL | ﾍﾞｱﾘﾝｸﾞ | 1 | A & B |
| | | | | | | -1995.3 |
| - | Z-1-81129-196-0 | | BEARING,BALL | ﾍﾞｱﾘﾝｸﾞ | 1 | A & B |
| | | | | | | 1995.4- |
| 4 | Z-5-81129-156-0 | | WASHER,ADJUST | ﾜｯｼｬ | 2 | A,B |
| 5 | Z-1-81116-044-0 | | WIRE,LEAD | ﾜｲﾔ | 1 | A,B |
| 6 | Z-1-81129-384-0 | | TERMINAL | ﾀｰﾐﾅﾙ | 1 | A,B |
| 7 | Z-1-81129-396-0 | | COIL,FIELD | ｺｲﾙ | 1 | A,B |
| 8 | NO PART NO. | | SCREW,DISH | ｽｸﾘｭ | 4 | A,B |
| A2 | Z-1-81115-061-0 | | COVER ASSY,REAR | ｶﾊﾞｰ | 1 | A,B |
| | | | | | | INC.9-15,52 |
| 9 | Z-1-81115-062-0 | | COVER,REAR | ｶﾊﾞｰ | 1 | A,B |
| 10 | NO PART NO. | | BOLT | ﾎﾞﾙﾄ | 3 | A,B |
| 11 | NO PART NO. | | WASHER | ﾜｯｼｬ | 2 | A,B |
| 12 | Z-1-81118-036-0 | | HOLDER,BRUSH | ﾎﾙﾀﾞ | 1 | A,B |
| 13 | Z-1-81117-014-0 | | SPRING,BRUSH | ｽﾌﾟﾘﾝｸﾞ | 4 | A,B |
| 14 | Z-1-81116-043-0 | | BRUSH,(-) | ﾌﾞﾗｼ | 2 | A,B |
| 15 | Z-1-81116-042-0 | | BRUSH,(+) | ﾌﾞﾗｼ | 2 | A,B |
| 16 | Z-1-82553-023-0 | | SWITCH,SAFETY RELAY | ｽｲｯﾁ | 1 | A & B |
| | | | | | | INC.17,18 |
| | | | | | | -1995.3 |
| - | Z-1-82553-037-0 | | SWITCH,SAFETY RELAY | ｽｲｯﾁ | 1 | A & B |
| | | | | | | INC.17,18 |
| | | | | | | 1995.4- |
| 17 | NO PART NO. | | HOLDER | ﾎﾙﾀﾞ | 1 | A,B |
| 18 | NO PART NO. | | BOLT | ﾎﾞﾙﾄ | 1 | A,B |
| 19 | Z-1-81123-025-0 | | COVER,FRONT | ｶﾊﾞｰ | 1 | A,B |
| | | | | | | INC.20 |
| 20 | Z-1-81129-397-0 | | BUSHING | ﾌﾞｯｼﾝｸﾞ | 1 | A,B |
| 21 | Z-5-81129-142-0 | | PLUG,DISH | ﾌﾟﾗｸﾞ | 1 | A,B |
| 22 | Z-5-81122-016-0 | | CLUTCH,PINION | ｸﾗｯﾁ | 1 | A,B |
| 23 | Z-5-81129-144-0 | | RING,CLIP | ﾘﾝｸﾞ | 2 | A,B |
| 24 | Z-5-81129-145-0 | | STOPPER,PINION | ｽﾄｯﾊﾟ | 1 | A,B |
| 25 | Z-1-81113-026-0 | | BRACKET,CENTER | ﾌﾞﾗｹｯﾄ | 1 | A,B |
| 26 | Z-1-81129-387-0 | | BOLT | ﾎﾞﾙﾄ | 3 | A,B |
| 27 | Z-1-81123-024-0 | | SHAFT | ｼｬﾌﾄ | 1 | A,B |
| | | | | | | INC.28 |
| 28 | Z-1-81129-386-0 | | BEARING,BALL | ﾍﾞｱﾘﾝｸﾞ | 1 | A,B |
| 29 | Z-5-81129-160-0 | | WASHER | ﾜｯｼｬ | 1 | A,B |
| 30 | Z-5-81129-159-0 | | WASHER | ﾜｯｼｬ | 2 | A,B |
| 31 | Z-5-81129-158-0 | | WASHER | ﾜｯｼｬ | 1 | A,B |
| 32 | Z-1-81113-073-0 | | BRACKET,CENTER | ﾌﾞﾗｹｯﾄ | 1 | A,B |

## FIG. 36 STARTER (INNER PARTS) (NIKKO MAKE) (A,B)
スタータ(インナパーツ)

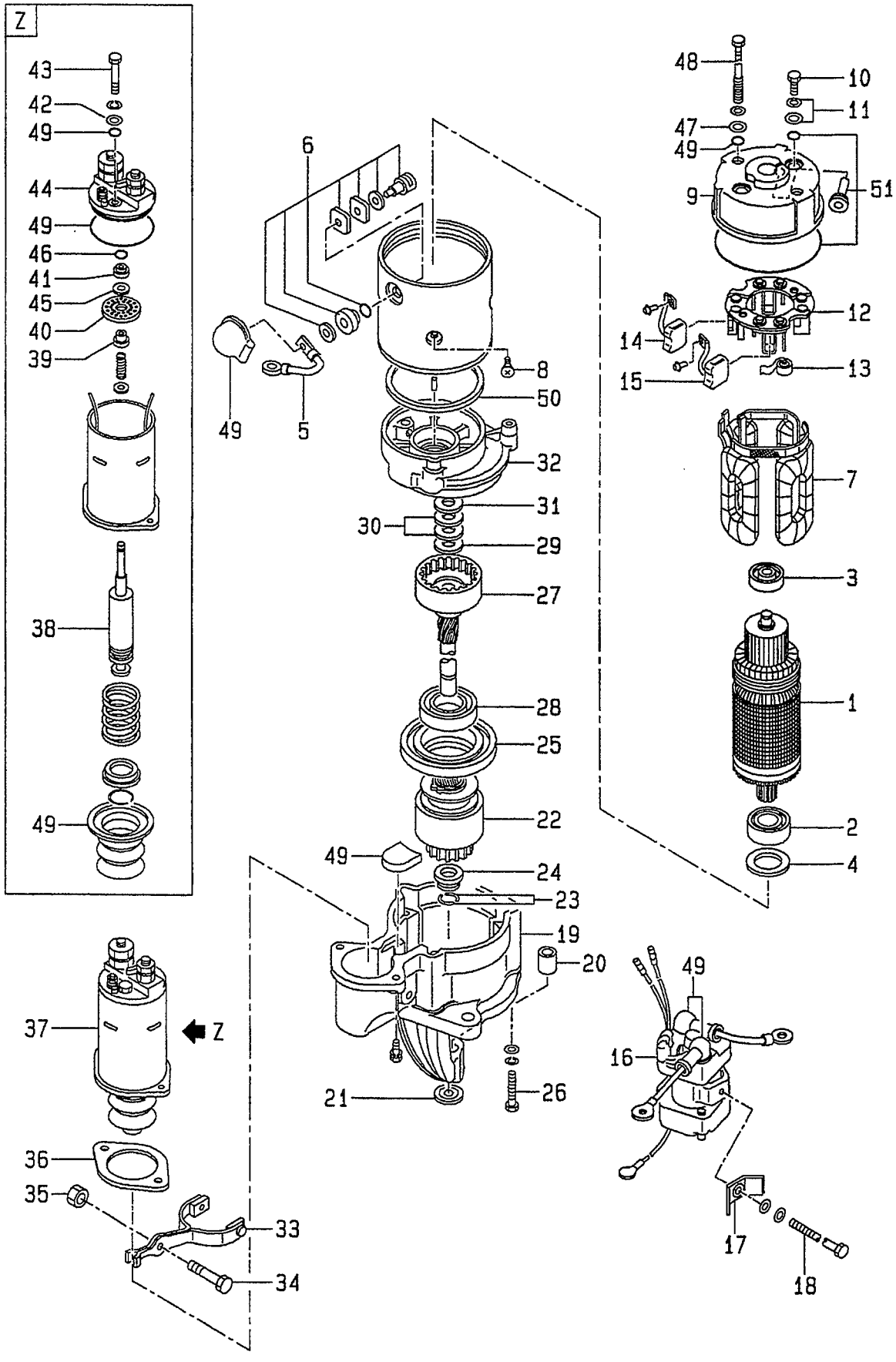

A: A-6BG1QC
B: A-6BG1TQC
C: A-6BG1QC02
D: A-6BG1QC03
E: A-6BG1QC05
F: A-6BG1QC06
G: A-6BG1QC07
H: A-6BG1QC08
J: A-6BG1QC09
K: A-6BG1QC05S

**FIG. 36**

| Item No. 見出番号 | Part No. 部品番号 | Mark 記号 | Description 部品名称 | | Req'd 個数 | Remarks : serial No. 備考：実施号車 |
|---|---|---|---|---|---|---|
| 33 | Z-1-81127-031-0 | | LEVER,SHIFT | ﾚﾊﾞｰ | 1 | A,B |
| 34 | Z-1-81129-185-0 | | PIN | ﾋﾟﾝ | 1 | A,B |
| 35 | Z-1-81129-184-0 | | NUT | ﾅｯﾄ | 1 | A,B |
| 36 | Z-5-81129-147-0 | | PLATE | ﾌﾟﾚｰﾄ | 1 | A,B |
| 37 | Z-5-81151-036-0 | | SWITCH,MAGNETIC | ｽｲｯﾁ | 1 | A,B |
| | | | | | | INC.38-46 |
| 38 | Z-5-81129-146-0 | | PLUNGER | ﾌﾟﾗﾝｼﾞｬ | 1 | A,B |
| 39 | Z-9-8211-6140-0 | | BUSHING | ﾌﾞｯｼﾝｸﾞ | 1 | A,B |
| 40 | Z-5-81129-148-0 | | CONTACTOR | ｺﾝﾀｸﾀ | 1 | A,B |
| 41 | Z-5-81118-019-0 | | HOLDER | ﾎﾙﾀﾞ | 1 | A,B |
| 42 | Z-5-81129-151-0 | | WASHER | ﾜｯｼｬ | 2 | A,B |
| 43 | NO PART NO. | | BOLT | ﾎﾞﾙﾄ | 2 | A,B |
| 44 | Z-5-81129-150-0 | | TERMINAL | ﾀｰﾐﾅﾙ | 1 | A,B |
| 45 | Z-9-8211-6142-0 | | WASHER | ﾜｯｼｬ | 1 | A,B |
| 46 | Z-5-81129-149-0 | | RING,CLIP | ﾘﾝｸﾞ | 2 | A,B |
| 47 | Z-1-81229-114-0 | | WASHER | ﾜｯｼｬ | 2 | A,B |
| 48 | Z-5-81129-214-0 | | BOLT,THROUGH | ﾎﾞﾙﾄ | 2 | A,B |
| 49 | Z-1-81129-394-0 | | SEAL KIT | ｼｰﾙｷｯﾄ | 1 | A,B |
| | | | | | | INC.50,51 |
| 50 | Z-1-81129-299-0 | * | GASKET | ｶﾞｽｹｯﾄ | 1 | A,B |
| 51 | NO PART NO. | * | SEAL | ｼｰﾙ | 1 | A,B |
| 52 | Z-1-81129-389-0 | + | GASKET | ｶﾞｽｹｯﾄ | 1 | A,B |

## FIG. 37 STARTER (INNER PARTS) (HITACHI MAKE) (A,B)
スタータ(インナパーツ)

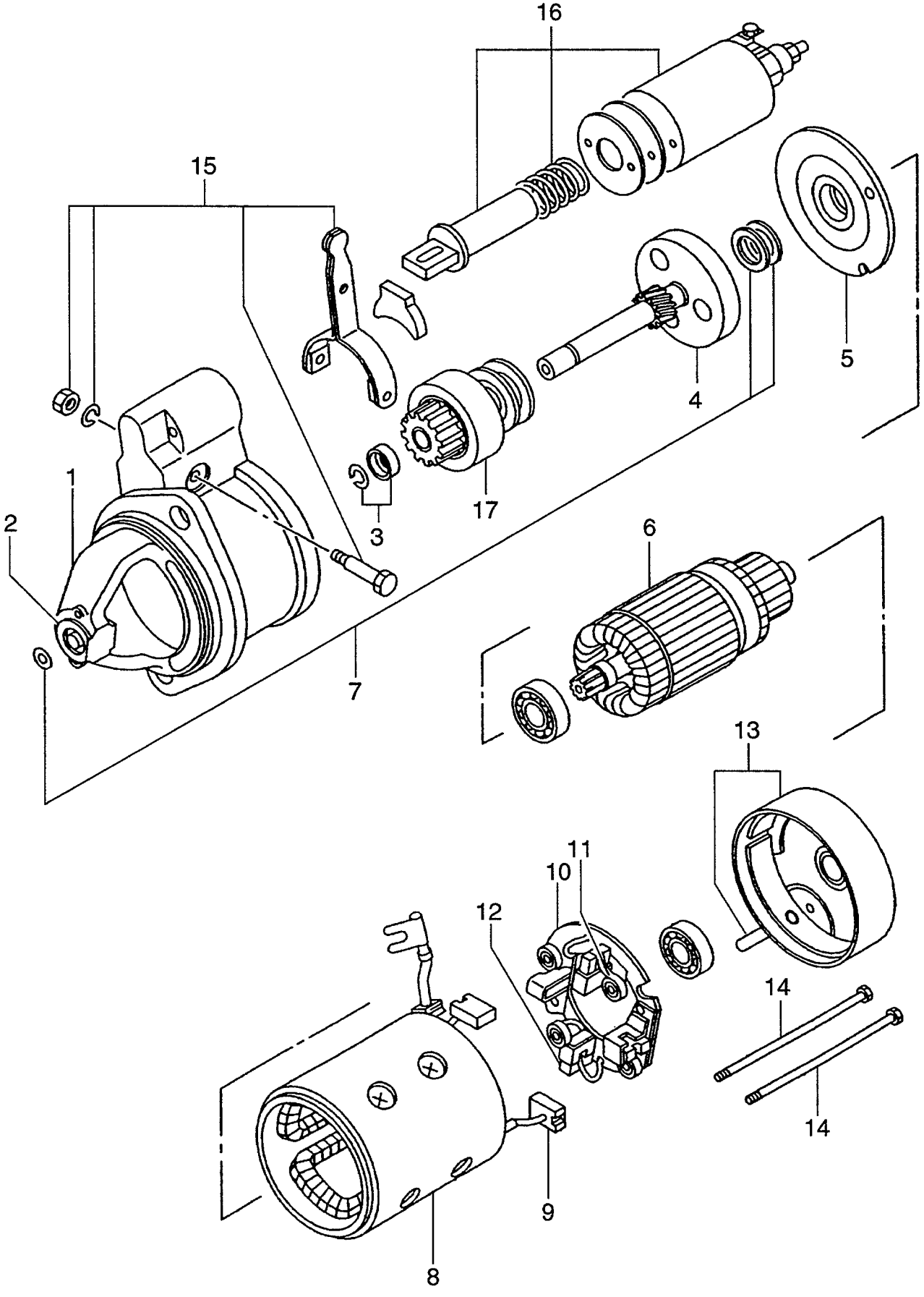

A: A-6BG1QC
B: A-6BG1TQC
C: A-6BG1QC02
D: A-6BG1QC03
E: A-6BG1QC05
F: A-6BG1QC06
G: A-6BG1QC07
H: A-6BG1QC08
J: A-6BG1QC09
K: A-6BG1QC05S

# FIG. 37

| Item No. 見出番号 | Part No. 部品番号 | Mark 記号 | Description 部品名称 | | Req'd 個数 | Remarks : serial No. 備考：実施号車 |
|---|---|---|---|---|---|---|
| A | Z-1-81100-343-1 | | STARTER ASSY | ｽﾀｰﾀｱｯｾﾝ | 1 | A,B<br>INC.1-18 |
| 1 | Z-1-81114-019-0 | | CASE | ｹｰｽ | 1 | A,B<br>INC.2 |
| 2 | Z-5-81119-012-0 | | METAL | ﾒﾀﾙ | 1 | A,B |
| 3 | Z-1-81129-176-0 | | STOPPER | ｽﾄｯﾊﾟ | 1 | A,B |
| 4 | Z-1-81129-181-0 | | SHAFT | ｼｬﾌﾄ | 1 | A,B |
| 5 | Z-8-97226-651-0 | | BRACKET | ﾌﾞﾗｹｯﾄ | 1 | A,B |
| 6 | Z-1-81121-025-0 | | ARMATURE | ｱｰﾏﾁｭｱ | 1 | A,B |
| 7 | Z-1-81129-175-0 | | WASHER | ﾜｯｼｬ | 1 | A,B |
| 8 | Z-8-97226-649-0 | | COIL | ｺｲﾙ | 1 | A & B<br>-2000.3 |
| - | Z-8-97250-574-0 | | COIL | ｺｲﾙ | 1 | A & B<br>2000.4- |
| 9 | Z-1-81116-024-0 | | BRUSH,(+) | ﾌﾞﾗｼ | 2 | A & B<br>-2000.3 |
| - | Z-1-81116-072-0 | | BRUSH,(+) | ﾌﾞﾗｼ | 2 | A & B<br>2000.4- |
| 10 | Z-1-81118-021-0 | | HOLDER | ﾎﾙﾀﾞ | 1 | A & B<br>-2000.3<br>INC.11,12 |
| - | Z-1-81118-065-0 | | HOLDER | ﾎﾙﾀﾞ | 1 | A & B<br>2000.4-<br>INC.11,12 |
| 11 | Z-1-81129-178-0 | | SPRING | ｽﾌﾟﾘﾝｸﾞ | 4 | A,B |
| 12 | Z-1-81116-023-0 | | BRUSH,(-) | ﾌﾞﾗｼ | 2 | A,B |
| 13 | Z-8-97226-650-0 | | COVER | ｶﾊﾞｰ | 1 | A,B |
| 14 | Z-8-97030-404-0 | | BOLT | ﾎﾞﾙﾄ | 2 | A,B |
| 15 | Z-5-81127-013-0 | | LEVER | ﾚﾊﾞｰ | 1 | A,B |
| 16 | Z-8-97226-673-0 | | SWITCH | ｽｲｯﾁ | 1 | A,B |
| 17 | Z-1-81123-009-6 | | CLUTCH | ｸﾗｯﾁ | 1 | A,B |
| 18 | Z-8-97226-655-0 | + | RELAY | ﾘﾚｰ | 1 | A,B |

## FIG. 38 STARTER (INNER PARTS) (C,D,E,F,H,J,K)
スタータ(インナパーツ)

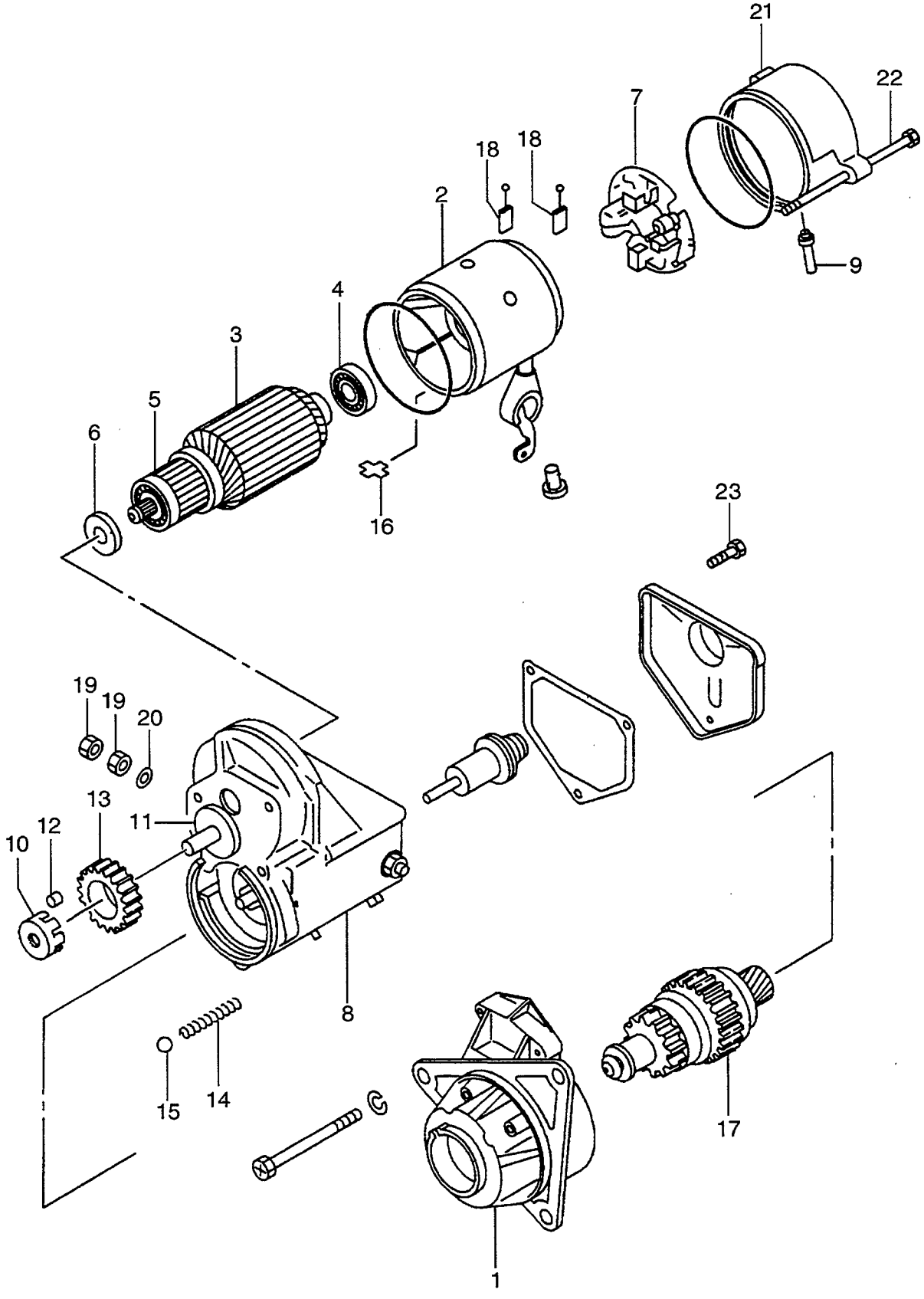

A: A-6BG1QC
B: A-6BG1TQC
C: A-6BG1QC02
D: A-6BG1QC03
E: A-6BG1QC05
F: A-6BG1QC06
G: A-6BG1QC07
H: A-6BG1QC08
J: A-6BG1QC09
K: A-6BG1QC05S

**FIG. 38**

| Item No. 見出番号 | Part No. 部品番号 | Mark 記号 | Description 部品名称 | | Req'd 個数 | Remarks : serial No. 備考：実施号車 |
|---|---|---|---|---|---|---|
| A | Z-1-81100-141-1 | | STARTER ASSY | ｽﾀｰﾀｱｯｾﾝ | 1 | C,D,E,F,H,J,K |
| | | | | | | INC.1-23 |
| 1 | Z-1-81114-018-0 | | CASE,PINION | ｹｰｽ | 1 | C,D,E,F,H,J,K |
| 2 | Z-1-81129-696-0 | | YOKE | ﾖｰｸ | 1 | C,D,E,F,H,J,K |
| 3 | Z-1-81121-052-1 | | ARMATURE | ｱｰﾏﾁｭｱ | 1 | C,D,E,F,H,J,K |
| | | | | | | INC.4,5 |
| 4 | Z-5-09800-064-0 | | BEARING,BALL | ﾍﾞｱﾘﾝｸﾞ | 1 | C,D,E,F,H,J,K |
| 5 | Z-5-09800-041-0 | | BEARING,BALL | ﾍﾞｱﾘﾝｸﾞ | 1 | C,D,E,F,H,J,K |
| 6 | Z-5-81129-128-0 | | WASHER | ﾜｯｼｬ | 1 | C,D,E,F,H,J,K |
| 7 | Z-5-81118-013-0 | | HOLDER,BRUSH | ﾎﾙﾀﾞ | 1 | C,D,E,F,H,J,K |
| 8 | Z-1-81151-034-0 | | SWITCH,MAGNETIC | ｽｲｯﾁ | 1 | C,D,E,F,H,J,K |
| 9 | Z-1-81129-677-0 | | COVER,DUST | ｶﾊﾞｰ | 1 | C,D,E,F,H,J,K |
| 10 | Z-5-81129-121-0 | | RETAINER | ﾘﾃｰﾅ | 1 | C,D,E,F,H,J,K |
| 11 | Z-5-81129-127-0 | | RETAINER | ﾘﾃｰﾅ | 1 | C,D,E,F,H,J,K |
| 12 | Z-5-81129-120-0 | | ROLLER | ﾛｰﾗ | 6 | C,D,E,F,H,J,K |
| 13 | Z-5-81123-018-0 | | GEAR | ｷﾞﾔｰ | 1 | C,D,E,F,H,J,K |
| 14 | Z-5-81129-119-0 | | SPRING | ｽﾌﾟﾘﾝｸﾞ | 1 | C,D,E,F,H,J,K |
| 15 | Z-5-81129-092-0 | | BALL | ﾎﾞｰﾙ | 1 | C,D,E,F,H,J,K |
| 16 | Z-5-81129-136-0 | | PLATE,LOCK | ﾌﾟﾚｰﾄ | 1 | C,D,E,F,H,J,K |
| 17 | Z-5-81124-004-0 | | CLUTCH,PINION | ｸﾗｯﾁ | 1 | C,D,E,F,H,J,K |
| 18 | Z-8-94171-853-0 | | BRUSH | ﾌﾞﾗｼ | 2 | C,D,E,F,H,J,K |
| 19 | Z-5-81129-126-0 | | NUT | ﾅｯﾄ | 2 | C,D,E,F,H,J,K |
| 20 | Z-5-81129-134-0 | | WASHER | ﾜｯｼｬ | 1 | C,D,E,F,H,J,K |
| 21 | Z-1-81115-236-0 | | COVER | ｶﾊﾞｰ | 1 | C,D,E,F,H,J,K |
| 22 | Z-1-81129-698-0 | | BOLT | ﾎﾞﾙﾄ | 2 | C,D,E,F,H,J,K |
| 23 | Z-5-81129-130-0 | | SCREW | ｽｸﾘｭ | 2 | C,D,E,F,H,J,K |

## FIG. 39 STARTER (INNER PARTS) (G) (E/G NO.-108900)
スタータ(インナパーツ)

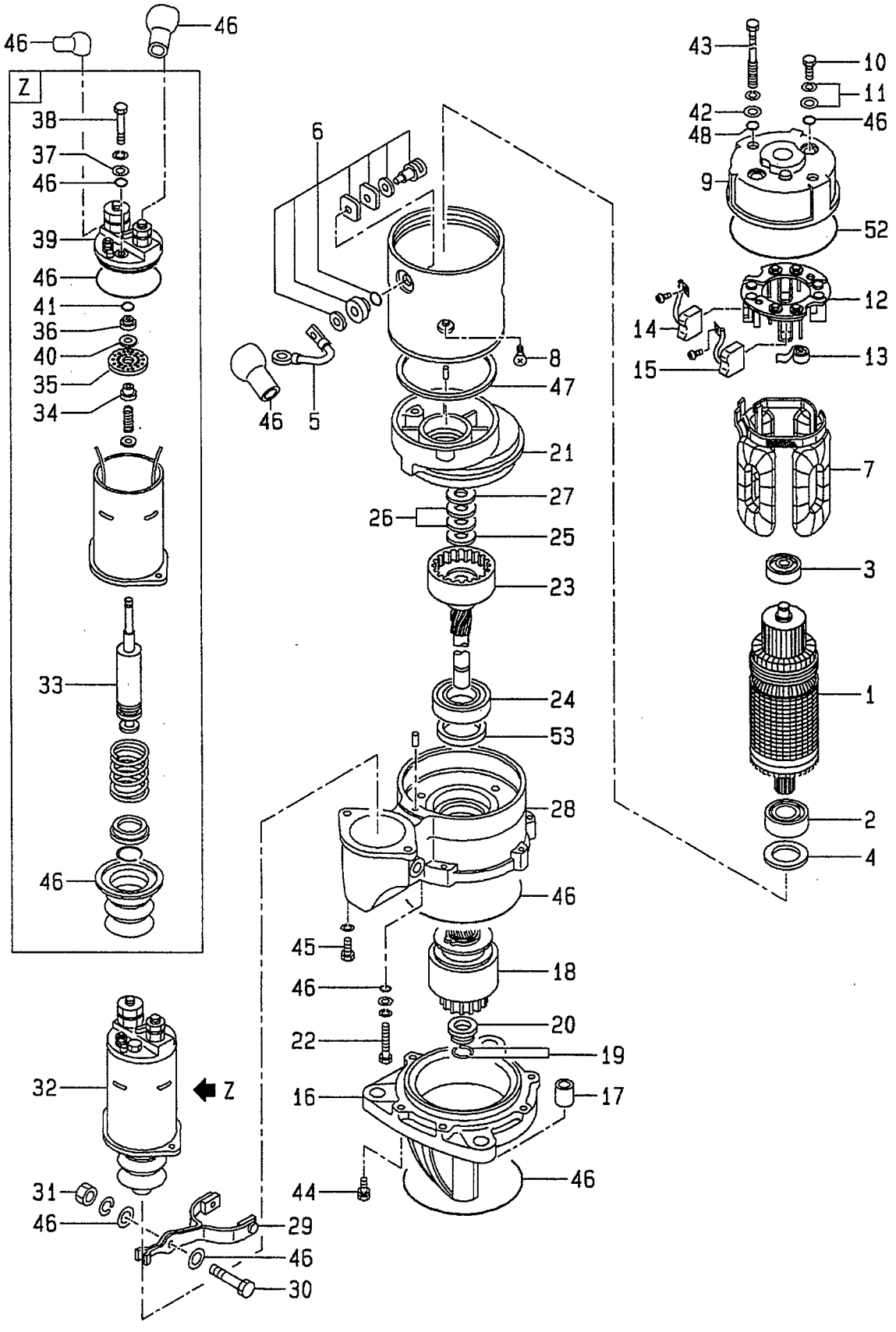

A: A-6BG1QC
B: A-6BG1TQC
C: A-6BG1QC02
D: A-6BG1QC03
E: A-6BG1QC05
F: A-6BG1QC06
G: A-6BG1QC07
H: A-6BG1QC08
J: A-6BG1QC09
K: A-6BG1QC05S

# FIG. 39

| Item No. 見出番号 | Part No. 部品番号 | Mark 記号 | Description 部品名称 | | Req'd 個数 | Remarks : serial No. 備考：実施号車 |
|---|---|---|---|---|---|---|
| A1 | Z-1-81100-206-1 | | STARTER ASSY | ｽﾀｰﾀｱｯｾﾝ | 1 | G |
| | | | | | | INC.1-53 |
| 1 | Z-1-81121-037-0 | | ARMATURE | ｱｰﾏﾁｭｱ | 1 | G |
| | | | | | | INC.2-4 |
| 2 | Z-5-81129-155-0 | | BEARING,BALL | ﾍﾞｱﾘﾝｸﾞ | 1 | G |
| 3 | Z-1-81129-196-0 | | BEARING,BALL | ﾍﾞｱﾘﾝｸﾞ | 1 | G |
| 4 | Z-5-81129-156-0 | | WASHER,ADJUST | ﾜｯｼｬ | 2 | G |
| 5 | Z-1-81116-044-0 | | WIRE,LEAD | ﾜｲﾔ | 1 | G |
| 6 | Z-1-81129-384-0 | | TERMINAL | ﾀｰﾐﾅﾙ | 1 | G |
| 7 | Z-1-81129-396-0 | | COIL,FIELD | ｺｲﾙ | 1 | G |
| 8 | NO PART NO. | | SCREW,DISH | ｽｸﾘｭ | 4 | G |
| A2 | Z-1-81115-065-0 | | COVER ASSY,REAR | ｶﾊﾞｰｱｯｾﾝ | 1 | G |
| | | | | | | INC.9-15 |
| 9 | Z-1-81115-066-0 | | COVER,REAR | ｶﾊﾞｰ | 1 | G |
| 10 | NO PART NO. | | BOLT | ﾎﾞﾙﾄ | 3 | G |
| 11 | NO PART NO. | | WASHER | ﾜｯｼｬ | 2 | G |
| 12 | Z-1-81118-036-0 | | HOLDER,BRUSH | ﾎﾙﾀﾞ | 1 | G |
| 13 | Z-1-81117-014-0 | | SPRING,BRUSH | ｽﾌﾟﾘﾝｸﾞ | 4 | G |
| 14 | Z-1-81116-043-0 | | BRUSH,(-) | ﾌﾞﾗｼ | 2 | G |
| 15 | Z-1-81116-042-0 | | BRUSH,(+) | ﾌﾞﾗｼ | 2 | G |
| 16 | Z-1-81113-075-0 | | COVER,FRONT | ｶﾊﾞｰ | 1 | INC.17 |
| | | | | | | G |
| 17 | NO PART NO. | | BUSHING | ﾌﾞｯｼﾝｸﾞ | 1 | G |
| 18 | Z-5-81122-016-0 | | CLUTCH,PINION | ｸﾗｯﾁ | 1 | G |
| 19 | Z-5-81129-144-0 | | CLIP | ｸﾘｯﾌﾟ | 2 | G |
| 20 | Z-5-81129-145-0 | | STOPPER,PINION | ｽﾄｯﾊﾟ | 1 | G |
| 21 | Z-1-81113-077-0 | | BRACKET,CENTER | ﾌﾞﾗｹｯﾄ | 1 | G |
| 22 | NO PART NO. | | BOLT | ﾎﾞﾙﾄ | 3 | G |
| 23 | Z-1-81129-402-0 | | SHAFT | ｼｬﾌﾄ | 1 | G |
| | | | | | | INC.24 |
| 24 | Z-1-81129-386-0 | | BEARING,BALL | ﾍﾞｱﾘﾝｸﾞ | 1 | G |
| 25 | Z-5-81129-160-0 | | WASHER | ﾜｯｼｬ | 1 | G |
| 26 | Z-5-81129-159-0 | | WASHER | ﾜｯｼｬ | 2 | G |
| 27 | Z-5-81129-158-0 | | WASHER | ﾜｯｼｬ | 1 | G |
| 28 | Z-1-81113-076-0 | | BRACKET,CENTER | ﾌﾞﾗｹｯﾄ | 1 | G |
| | | | | | | INC.53 |
| 29 | Z-1-81127-032-0 | | LEVER,SHIFT | ﾚﾊﾞｰ | 1 | G |
| 30 | Z-1-81129-234-0 | | PIN | ﾋﾟﾝ | 1 | G |
| 31 | Z-1-81129-184-0 | | NUT | ﾅｯﾄ | 1 | G |
| 32 | Z-5-81151-036-0 | | SWITCH,MAGNETIC | ｽｲｯﾁ | 1 | G |
| | | | | | | INC.33-41 |
| 33 | Z-5-81129-146-0 | | PLUNGER | ﾌﾟﾗﾝｼﾞｬ | 1 | G |
| 34 | Z-9-8211-6140-0 | | BUSHING | ﾌﾞｯｼﾝｸﾞ | 1 | G |
| 35 | Z-5-81129-148-0 | | CONTACTOR | ｺﾝﾀｸﾀ | 1 | G |
| 36 | Z-5-81118-019-0 | | HOLDER | ﾎﾙﾀﾞ | 1 | G |
| 37 | Z-5-81129-151-0 | | WASHER | ﾜｯｼｬ | 2 | G |
| 38 | NO PART NO. | | BOLT | ﾎﾞﾙﾄ | 2 | G |
| 39 | Z-5-81129-150-0 | | TERMINAL | ﾀｰﾐﾅﾙ | 1 | G |
| 40 | Z-9-8211-6142-0 | | WASHER | ﾜｯｼｬ | 1 | G |
| 41 | Z-5-81129-149-0 | | RING,CLIP | ﾘﾝｸﾞ | 2 | G |

## FIG. 39 STARTER (INNER PARTS) (G) (E/G NO.-108900)
スタータ(インナパーツ)

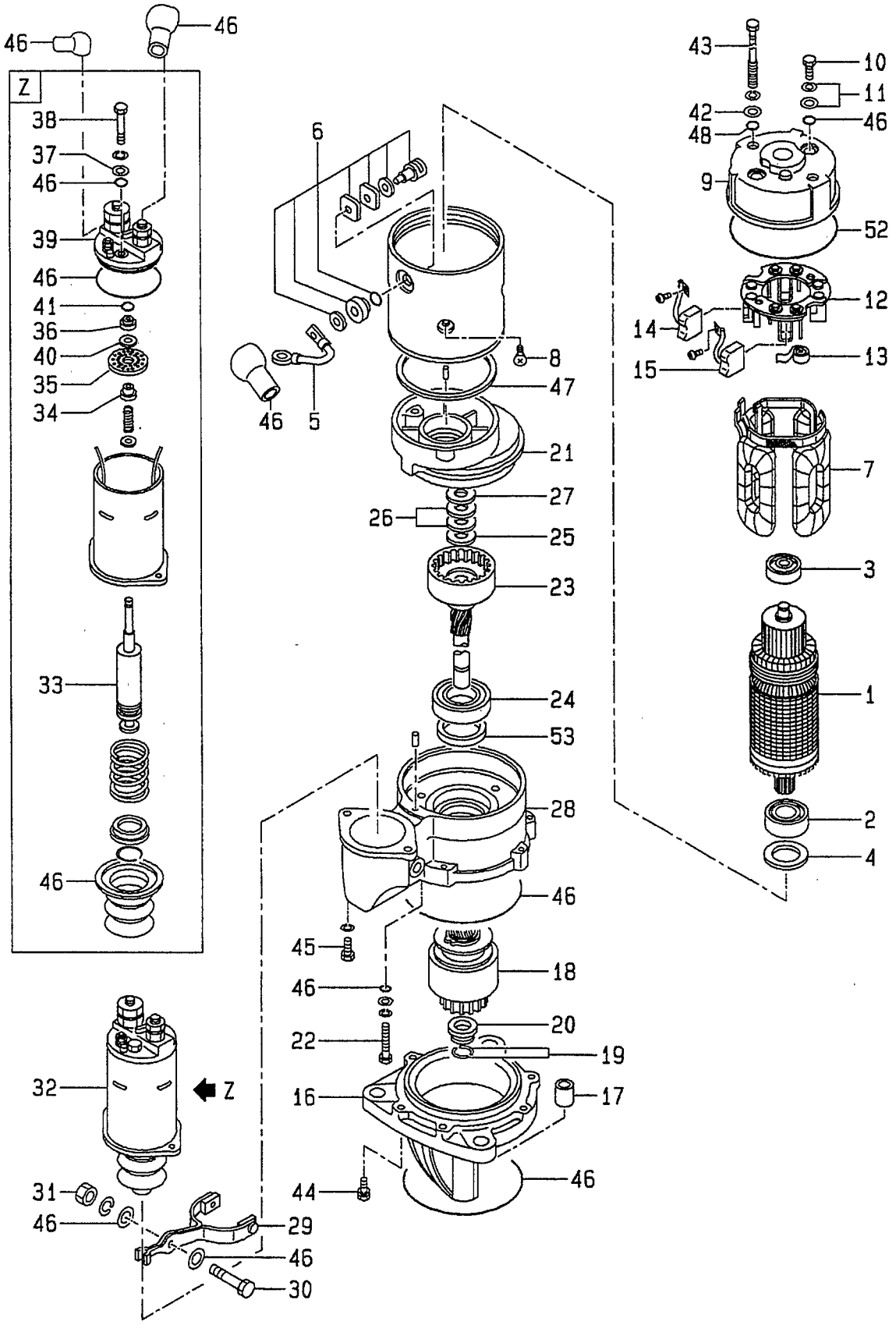

A: A-6BG1QC
B: A-6BG1TQC
C: A-6BG1QC02
D: A-6BG1QC03
E: A-6BG1QC05
F: A-6BG1QC06
G: A-6BG1QC07
H: A-6BG1QC08
J: A-6BG1QC09
K: A-6BG1QC05S

**FIG. 39**

| Item No. 見出番号 | Part No. 部品番号 | Mark 記号 | Description 部品名称 | | Req'd 個数 | Remarks : serial No. 備考：実施号車 |
|---|---|---|---|---|---|---|
| 42 | NO PART NO. | | WASHER | ﾜｯｼｬ | 5 | G |
| 43 | Z-5-81129-214-0 | | BOLT,THROUGH | ﾎﾞﾙﾄ | 2 | G |
| 44 | Z-1-81129-403-0 | | BOLT | ﾎﾞﾙﾄ | 6 | G |
| 45 | NO PART NO. | | BOLT | ﾎﾞﾙﾄ | 2 | G |
| 46 | Z-1-81129-418-0 | | SEAL KIT | ｼｰﾙｷｯﾄ | 1 | G |
| | | | | | | INC.48,53 |
| 47 | Z-1-81129-389-0 | | GASKET | ｶﾞｽｹｯﾄ | 1 | G |
| 48 | Z-9-8112-9022-0 | * | SEAL | ｼｰﾙ | 5 | G |
| 49 | Z-1-81129-388-0 | + | COVER | ｶﾊﾞｰ | 1 | G |
| | | | | | | 1995.3- |
| 50 | Z-1-81129-391-0 | + | GASKET | ｶﾞｽｹｯﾄ | 1 | G |
| | | | | | | 1995.3- |
| 51 | Z-1-81129-397-0 | + | METAL | ﾒﾀﾙ | 1 | G |
| 52 | Z-1-81129-392-0 | | GASKET | ｶﾞｽｹｯﾄ | 1 | G |
| 53 | Z-1-81129-405-0 | * | SEAL,OIL | ｼｰﾙ | 1 | G |

## FIG. 39A STARTER (INNER PARTS) (G) (E/G NO.108901-)
スタータ(インナパーツ)

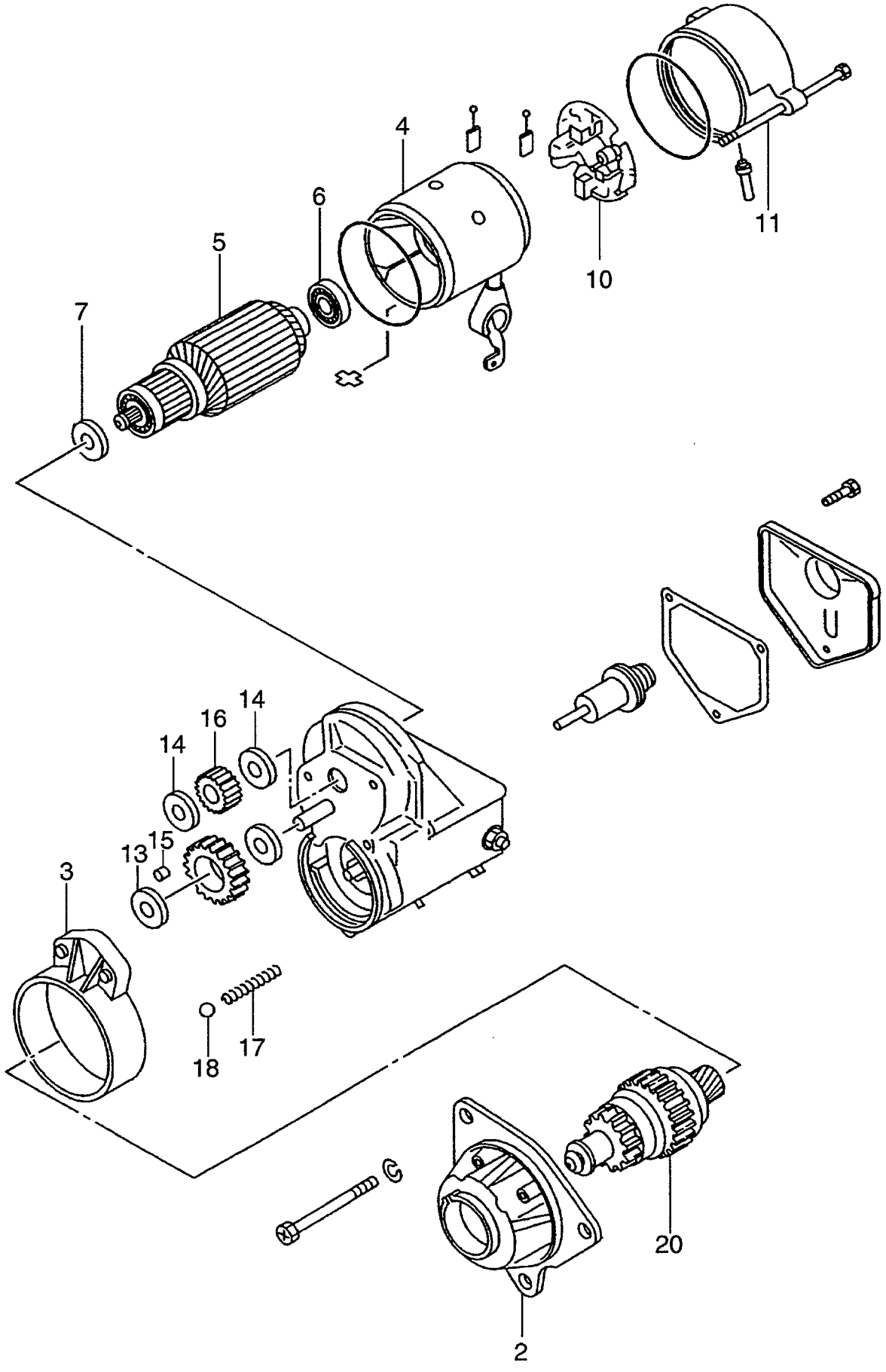

A: A-6BG1QC
B: A-6BG1TQC
C: A-6BG1QC02
D: A-6BG1QC03
E: A-6BG1QC05
F: A-6BG1QC06
G: A-6BG1QC07
H: A-6BG1QC08
J: A-6BG1QC09
K: A-6BG1QC05S

# FIG. 39A

| Item No. 見出番号 | Part No. 部品番号 | Mark 記号 | Description 部品名称 | | Req'd 個数 | Remarks : serial No. 備考：実施号車 |
|---|---|---|---|---|---|---|
| A | Z-1-81100-404-0 | | STARTER ASSY | ｽﾀｰﾀｱｯｾﾝ | 1 | G |
| | | | | | | INC.1-21 |
| 1 | Z-1-81129-851-0 | + | SEAL KIT | ｼｰﾙｷｯﾄ | 1 | G |
| 2 | Z-1-81113-133-0 | | CASE | ｹｰｽ | 1 | G |
| 3 | Z-1-81118-059-0 | | BRACKET | ﾌﾞﾗｹｯﾄ | 1 | G |
| 4 | Z-1-81111-013-0 | | YOKE | ﾖｰｸ | 1 | G |
| 5 | Z-1-81121-062-0 | | ARMATURE | ｱｰﾏﾁｭｱ | 1 | G |
| | | | | | | INC.6 |
| 6 | Z-1-81129-713-0 | | BEARING | ﾍﾞｱﾘﾝｸﾞ | 1 | G |
| 7 | Z-5-81129-156-0 | | WASHER | ﾜｯｼｬ | 1 | G |
| 8 | Z-1-81116-060-0 | + | BRUSH,(+) | ﾌﾞﾗｼ | 2 | G |
| 9 | Z-5-81117-019-0 | + | SPRING | ｽﾌﾟﾘﾝｸﾞ | 4 | G |
| 10 | Z-1-81118-061-0 | | HOLDER | ﾎﾙﾀﾞ | 1 | G |
| 11 | Z-1-81129-722-0 | | BOLT | ﾎﾞﾙﾄ | 4 | G |
| - | Z-1-81129-706-0 | | BOLT | ﾎﾞﾙﾄ | 4 | G |
| 12 | Z-1-81151-118-0 | + | SWITCH | ｽｲｯﾁ | 1 | G |
| 13 | Z-1-81118-060-0 | | RETAINER | ﾘﾃｰﾅ | 1 | G |
| 14 | Z-1-81129-709-0 | | RETAINER | ﾘﾃｰﾅ | 2 | G |
| 15 | Z-1-81129-715-0 | | ROLLER | ﾛｰﾗ | 5 | G |
| 16 | Z-1-81129-714-0 | | GEAR | ｷﾞﾔｰ | 1 | G |
| 17 | Z-1-81129-772-0 | | SPRING | ｽﾌﾟﾘﾝｸﾞ | 1 | G |
| 18 | Z-1-81129-713-0 | | BALL | ﾎﾞｰﾙ | 1 | G |
| 19 | Z-1-81116-061-0 | + | BRUSH,(-) | ﾌﾞﾗｼ | 2 | G |
| 20 | Z-1-81122-063-0 | | CLUTCH | ｸﾗｯﾁ | 1 | G |
| 21 | Z-1-81111-013-0 | + | COVER | ｶﾊﾞｰ | 1 | G |

## FIG. 40 GENERATOR (INNER PARTS) (NIKKO MAKE) (A,B,D,H)
ジェネレータ(インナパーツ)

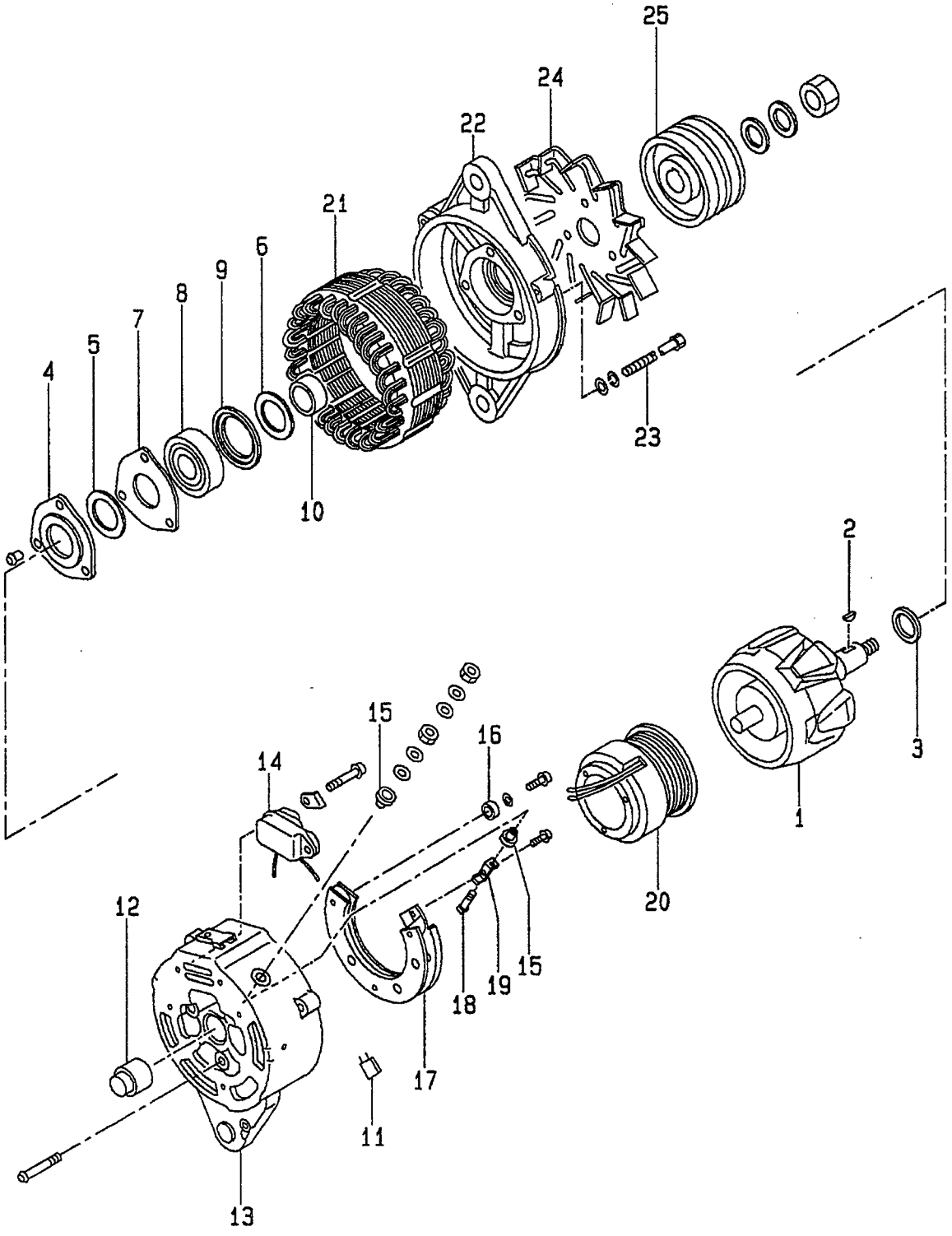

A: A-6BG1QC
B: A-6BG1TQC
C: A-6BG1QC02
D: A-6BG1QC03
E: A-6BG1QC05
F: A-6BG1QC06
G: A-6BG1QC07
H: A-6BG1QC08
J: A-6BG1QC09
K: A-6BG1QC05S

**FIG. 40**

| Item No. 見出番号 | Part No. 部品番号 | Mark 記号 | Description 部品名称 | | Req'd 個数 | Remarks : serial No. 備考：実施号車 |
|---|---|---|---|---|---|---|
| A1 | 530C2-72101 | | GENERATOR ASSY | ｼﾞｪﾈﾚｰﾀｱｯｾﾝ | 1 | A,B,D,H |
| | | | | | | INC.1-25 |
| | | | | | | 24V-40A(GE) |
| 1 | Z-1-81221-056-0 | | ROTOR | ﾛｰﾀ | 1 | A,B,D,H |
| 2 | Z-9-8221-5867-0 | | KEY | ｷｰ | 1 | A,B,D,H |
| 3 | Z-1-81229-373-0 | | SPACER | ｽﾍﾟｰｻ | 1 | A,B,D,H |
| 4 | Z-1-81229-375-0 | | RETAINER | ﾘﾃｰﾅ | 1 | A,B,D,H |
| 5 | Z-1-81229-383-0 | | PACKING | ﾊﾟｯｷﾝｸﾞ | 1 | A,B,D,H |
| 6 | Z-1-81229-384-0 | | PACKING | ﾊﾟｯｷﾝｸﾞ | 1 | A,B,D,H |
| 7 | Z-1-81229-376-0 | | RETAINER | ﾘﾃｰﾅ | 1 | A,B,D,H |
| 8 | Z-1-81229-380-0 | | BEARING,BALL | ﾍﾞｱﾘﾝｸﾞ | 1 | A,B,D,H |
| 9 | Z-1-81229-377-0 | | RETAINER | ﾘﾃｰﾅ | 1 | A,B,D,H |
| 10 | Z-1-81229-374-0 | | SPACER | ｽﾍﾟｰｻ | 1 | A,B,D,H |
| A2 | Z-1-81214-175-0 | | BRACKET ASSY,REAR | ﾌﾞﾗｹｯﾄｱｯｾﾝ | 1 | A,B,D,H |
| | | | | | | INC.11-19 |
| 11 | Z-1-81229-539-0 | | CONDENSER | ｺﾝﾃﾞﾝｻ | 1 | A,B,D,H |
| 12 | Z-1-81229-381-0 | | REGULATOR | ﾚｷﾞｭﾚｰﾀ | 1 | A,B,D,H |
| 13 | Z-1-81214-176-0 | | BRACKET | ﾌﾞﾗｹｯﾄ | 1 | A,B,D,H |
| 14 | Z-1-81270-001-0 | | REGULATOR | ﾚｷﾞｭﾚｰﾀ | 1 | A,B,D,H |
| 15 | Z-1-81229-042-0 | | BUSHING | ﾌﾞｯｼﾝｸﾞ | 2 | A,B,D,H |
| 16 | NO PART NO. | | PLATE,INSULATE | ﾌﾟﾚｰﾄ | 2 | A,B,D,H |
| 17 | Z-1-81219-056-0 | | RECTIFIER | ﾚｸﾃｨﾌｧｲｱ | 1 | A,B,D,H |
| 18 | Z-5-81229-192-0 | | BOLT | ﾎﾞﾙﾄ | 1 | A,B,D,H |
| 19 | NO PART NO. | | BAR,CONNECTOR | ﾊﾞｰ | 1 | A,B,D,H |
| 20 | Z-1-81212-003-0 | | COIL,FIELD | ｺｲﾙ | 1 | A,B,D,H |
| 21 | Z-1-81211-062-0 | | STATOR | ｽﾃｰﾀ | 1 | A,B,D,H |
| 22 | Z-1-81213-052-0 | | BRACKET,FRONT | ﾌﾞﾗｹｯﾄ | 1 | A,B,D,H |
| 23 | Z-1-81229-382-0 | | BOLT | ﾎﾞﾙﾄ | 3 | A,B,D,H |
| 24 | Z-1-81223-005-0 | | FAN | ﾌｧﾝ | 1 | A,B,D,H |
| 25 | Z-1-81222-055-0 | | PULLEY | ﾌﾟｰﾘ | 1 | A,B,D,H |

## FIG. 41 GENERATOR (INNER PARTS) (NIKKO MAKE) (C,E,F,G,J,K)
ジェネレータ(インナパーツ)

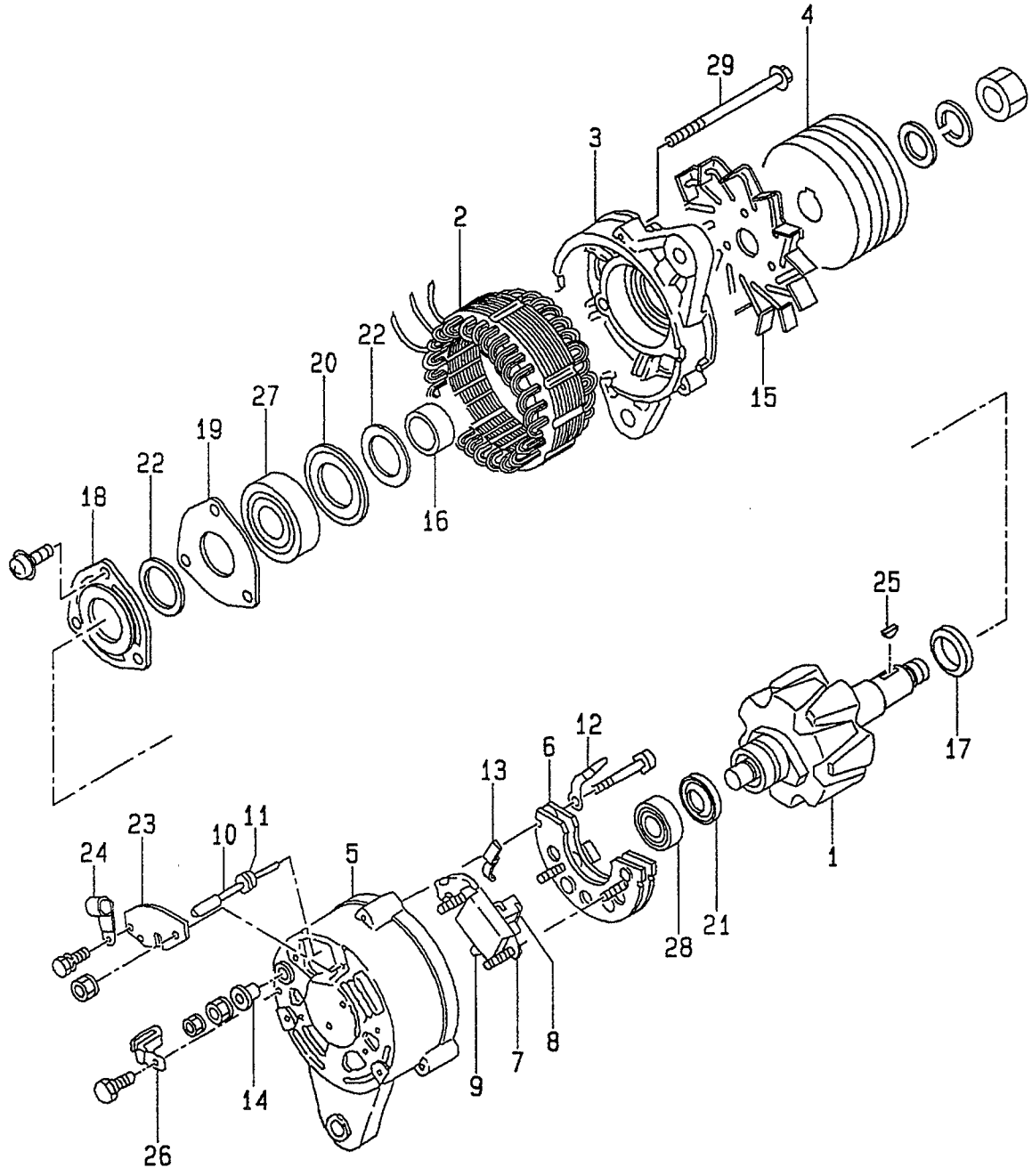

A: A-6BG1QC
B: A-6BG1TQC
C: A-6BG1QC02
D: A-6BG1QC03
E: A-6BG1QC05
F: A-6BG1QC06
G: A-6BG1QC07
H: A-6BG1QC08
J: A-6BG1QC09
K: A-6BG1QC05S

# FIG. 41

| Item No. 見出番号 | Part No. 部品番号 | Mark 記号 | Description 部品名称 | | Req'd 個数 | Remarks : serial No. 備考：実施号車 |
|---|---|---|---|---|---|---|
| A1 | Z-1-81200-365-0 | | GENERATOR ASSY | ｼﾞｪﾈﾚｰﾀｱｯｾﾝ | 1 | C,E,F,G,J,K |
| | | | | | | INC.1-29 |
| | | | | | | 24V-25A |
| 1 | Z-1-81221-072-0 | | ROTOR | ﾛｰﾀ | 1 | C,E,F,G,J,K |
| 2 | Z-1-81211-090-0 | | STATOR | ｽﾃｰﾀ | 1 | C,E,F,G,J,K |
| 3 | Z-1-81213-067-0 | | BRACKET,FRONT | ﾌﾞﾗｹｯﾄ | 1 | C,E,F,G,J,K |
| 4 | Z-1-81222-055-0 | | PULLEY | ﾌﾟｰﾘ | 1 | C,E,F,G,J,K |
| A2 | Z-1-81214-229-0 | | BRACKET ASSY,REAR | ﾌﾞﾗｹｯﾄｱｯｾﾝ | 1 | C,E,F,G,J,K |
| | | | | | | INC.5-14 |
| 5 | Z-1-81214-224-0 | | BRACKET,REAR | ﾌﾞﾗｹｯﾄ | 1 | C,E,F,G,J,K |
| 6 | Z-1-81217-069-0 | | RECTIFIER | ﾚｸﾃｨﾌｧｲｱ | 1 | C,E,F,G,J,K |
| 7 | Z-1-81270-007-0 | | REGULATOR | ﾚｷﾞｭﾚｰﾀ | 1 | C,E,F,G,J,K |
| | | | | | | INC.8,9 |
| 8 | Z-1-81217-062-0 | | HOLDER,BRUSH | ﾎﾙﾀﾞ | 1 | C,E,F,G,J,K |
| 9 | NO PART NO. | | BRUSH | ﾌﾞﾗｼ | 2 | C,E,F,G,J,K |
| 10 | Z-1-81229-556-0 | | WIRE,LEAD | ﾜｲﾔ | 1 | C,E,F,G,J,K |
| 11 | NO PART NO. | | BUSHING | ﾌﾞｯｼﾝｸﾞ | 1 | C,E,F,G,J,K |
| 12 | NO PART NO. | | BAR,CONNECTOR | ﾊﾞｰ | 1 | C,E,F,G,J,K |
| 13 | NO PART NO. | | BAR,CONNECTOR | ﾊﾞｰ | 1 | C,E,F,G,J,K |
| 14 | Z-8-94173-061-0 | | BUSHING | ﾌﾞｯｼﾝｸﾞ | 1 | C,E,F,G,J,K |
| 15 | Z-1-81223-009-0 | | FAN | ﾌｧﾝ | 1 | C,E,F,G,J,K |
| 16 | Z-1-81229-527-0 | | COLLAR | ｶﾗｰ | 1 | C,E,F,G,J,K |
| 17 | Z-1-81229-543-0 | | COLLAR | ｶﾗｰ | 1 | C,E,F,G,J,K |
| 18 | Z-1-81229-513-0 | | RETAINER | ﾘﾃｰﾅ | 1 | C,E,F,G,J,K |
| 19 | Z-1-81229-376-0 | | RETAINER | ﾘﾃｰﾅ | 1 | C,E,F,G,J,K |
| 20 | Z-1-81229-526-0 | | RETAINER | ﾘﾃｰﾅ | 1 | C,E,F,G,J,K |
| 21 | Z-8-94173-060-0 | | RETAINER | ﾘﾃｰﾅ | 1 | C,E,F,G,J,K |
| 22 | Z-1-81229-383-0 | | PACKING | ﾊﾟｯｷﾝｸﾞ | 2 | C,E,F,G,J,K |
| 23 | Z-1-81229-544-0 | | COVER | ｶﾊﾞｰ | 1 | C,E,F,G,J,K |
| 24 | Z-1-81229-122-0 | | CLIP | ｸﾘｯﾌﾟ | 1 | C,E,F,G,J,K |
| 25 | Z-9-8221-5867-0 | | KEY | ｷｰ | 1 | C,E,F,G,J,K |
| 26 | Z-1-81229-516-0 | | CLIP | ｸﾘｯﾌﾟ | 1 | C,E,F,G,J,K |
| 27 | Z-1-81229-225-0 | | BEARING,BALL | ﾍﾞｱﾘﾝｸﾞ | 1 | C,E,F,G,J,K |
| 28 | Z-8-94173-054-0 | | BEARING,BALL | ﾍﾞｱﾘﾝｸﾞ | 1 | C,E,F,G,J,K |
| 29 | NO PART NO. | | BOLT,THROUGH | ﾎﾞﾙﾄ | 3 | C,E,F,G,J,K |

FIG. 42 GENERATOR (INNER PARTS) (HITACHI MAKE) (C,E,F,G,J,K)
ｼﾞｪﾈﾚｰﾀ(ｲﾝﾅﾊﾟｰﾂ)

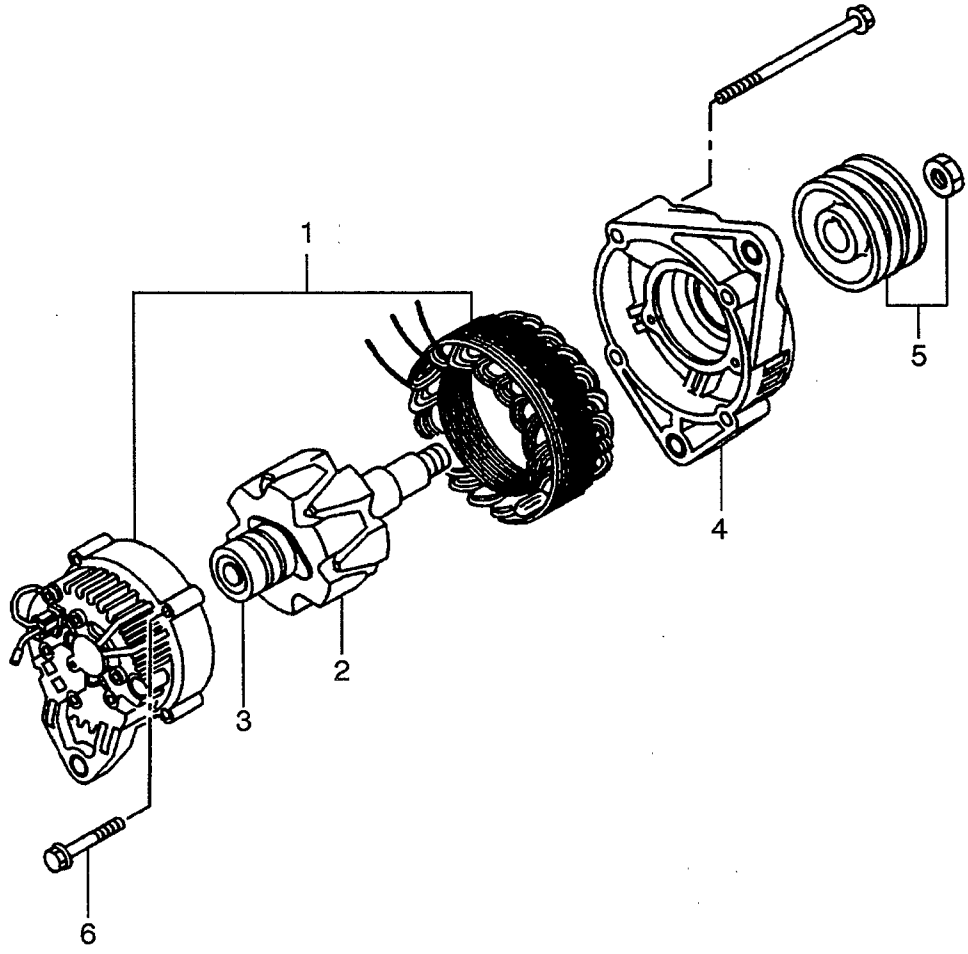

A: A-6BG1QC
B: A-6BG1TQC
C: A-6BG1QC02
D: A-6BG1QC03
E: A-6BG1QC05
F: A-6BG1QC06
G: A-6BG1QC07
H: A-6BG1QC08
J: A-6BG1QC09
K: A-6BG1QC05S

# FIG. 42

| Item No. 見出番号 | Part No. 部品番号 | Mark 記号 | Description 部品名称 | | Req'd 個数 | Remarks : serial No. 備考：実施号車 |
|---|---|---|---|---|---|---|
| A1 | Z-1-81200-512-0 | | GENERATOR ASSY | ｼﾞｪﾈﾚｰﾀｱｯｾﾝ | 1 | C,E,F,G,J,K |
| | | | | | | INC.1-6 |
| 1 | Z-1-81214-360-0 | | COVER | ｶﾊﾞｰ | 1 | C,E,F,G,J,K |
| 2 | Z-1-81221-103-0 | | ROTOR | ﾛｰﾀ | 1 | C,E,F,G,J,K |
| | | | | | | INC.3 |
| 3 | Z-8-97182-740-0 | | BEARING | ﾍﾞｱﾘﾝｸﾞ | 1 | C,E,F,G,J,K |
| 4 | Z-1-81213-102-0 | | COVER | ｶﾊﾞｰ | 1 | C,E,F,G,J,K |
| 5 | Z-1-81222-131-0 | | PULLEY | ﾌﾟｰﾘ | 1 | C,E,F,G,J,K |
| 6 | Z-8-97182-729-0 | | BOLT SET | ﾎﾞﾙﾄｾｯﾄ | 1 | C,E,F,G,J,K |

# FIG. 43 ELECTRICAL PARTS,FOOT & HANGER
エレクトリカルパーツ,フット&ハンガー

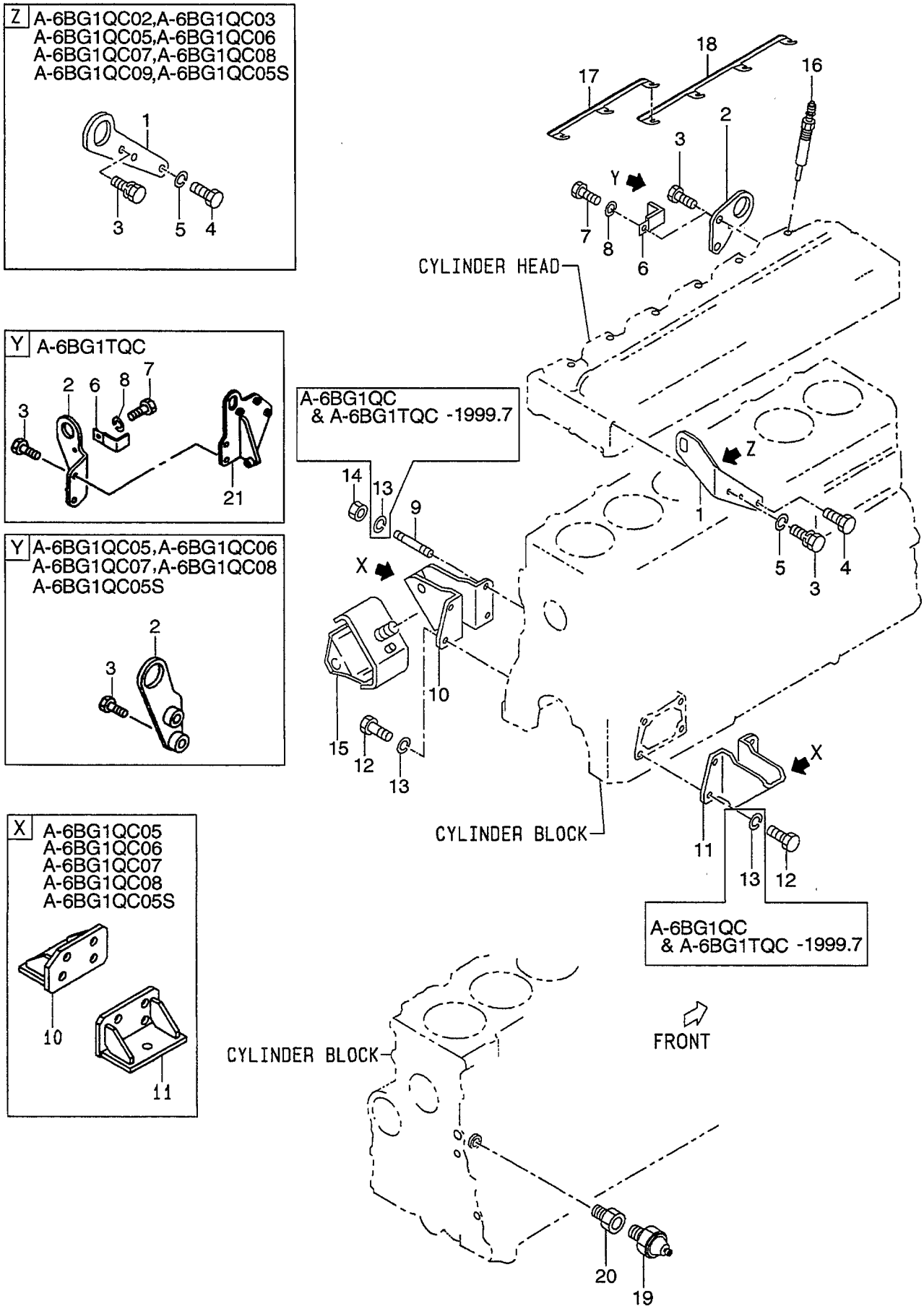

A: A-6BG1QC
B: A-6BG1TQC
C: A-6BG1QC02
D: A-6BG1QC03
E: A-6BG1QC05
F: A-6BG1QC06
G: A-6BG1QC07
H: A-6BG1QC08
J: A-6BG1QC09
K: A-6BG1QC05S

**FIG. 43**

| Item No. 見出番号 | Part No. 部品番号 | Mark 記号 | Description 部品名称 | | Req'd 個数 | Remarks : serial No. 備考：実施号車 |
|---|---|---|---|---|---|---|
| 1 | Z-1-11777-106-0 | | HANGER | ﾊﾝｶﾞ | 1 | A,B |
| - | Z-5-11777-055-1 | | HANGER | ﾊﾝｶﾞ | 1 | C,D,E,F,G,H,J,K |
| 2 | Z-9-11777-622-1 | | HANGER | ﾊﾝｶﾞ | 1 | A,C,D,J |
| - | Z-1-11777-110-1 | | HANGER | ﾊﾝｶﾞ | 1 | B<br>-1999.3 |
| - | Z-9-11777-612-1 | | HANGER | ﾊﾝｶﾞ | 1 | B<br>1999.4- |
| - | Z-1-11777-171-1 | | HANGER | ﾊﾝｶﾞ | 1 | E,F,G,H,K |
| 3 | Z-0-5014-0825-0 | | BOLT | ﾎﾞﾙﾄ | 1 | A & B<br>-1997.1 |
| - | Z-0-2868-0825-0 | | BOLT | ﾎﾞﾙﾄ | 1 | A<br>1997.2- |
| - | Z-0-2868-0825-0 | | BOLT | ﾎﾞﾙﾄ | 1 | B<br>1997.2-1999.3,<br>1999.9-1999.10 |
| - | Z-0-5004-1025-0 | | BOLT | ﾎﾞﾙﾄ | 2 | A & B<br>-1997.1 |
| - | Z-0-2868-1025-0 | | BOLT | ﾎﾞﾙﾄ | 2 | A<br>1997.2- |
| - | Z-0-2868-1025-0 | | BOLT | ﾎﾞﾙﾄ | 2 | B<br>1997.2-1999.3, 1999.11- |
| - | Z-0-5004-1040-0 | | BOLT | ﾎﾞﾙﾄ | 1 | A & B<br>-1997.1 |
| - | Z-0-2868-1040-0 | | BOLT | ﾎﾞﾙﾄ | 1 | A & B<br>1997.2- |
| - | Z-0-2868-1020-0 | | BOLT | ﾎﾞﾙﾄ | 3 | C,D,E,F,G,H,J,K |
| - | Z-0-5004-1035-0 | | BOLT | ﾎﾞﾙﾄ | 2 | E,F,G,H |
| 4 | Z-0-2080-1430-0 | | BOLT | ﾎﾞﾙﾄ | 1 | A |
| - | Z-0-2080-1430-0 | | BOLT | ﾎﾞﾙﾄ | 1 | B<br>-1999.3 |
| - | Z-0-2080-1425-0 | | BOLT | ﾎﾞﾙﾄ | 1 | B<br>1999.4- |
| - | Z-0-2080-1425-0 | | BOLT | ﾎﾞﾙﾄ | 1 | C,D,E,F,G,H,J,K |
| 5 | Z-9-0915-0514-0 | | WASHER | ﾜｯｼｬ | 1 | B<br>1999.4- |
| - | Z-9-0915-0514-0 | | WASHER | ﾜｯｼｬ | 1 | C,D,E,F,G,H,J,K |
| 6 | Z-9-09916-755-0 | | CLIP | ｸﾘｯﾌﾟ | 1 | A |
| - | Z-9-09916-755-0 | | CLIP | ｸﾘｯﾌﾟ | 1 | B<br>1999.4- |
| 7 | Z-0-2080-0610-0 | | BOLT | ﾎﾞﾙﾄ | 1 | A<br>-1997.1 |
| - | Z-0-2808-0610-0 | | BOLT | ﾎﾞﾙﾄ | 1 | A<br>1997.2- |
| - | Z-0-2808-0610-0 | | BOLT | ﾎﾞﾙﾄ | 1 | B<br>1999.4- |
| 8 | Z-9-0915-0506-0 | | WASHER | ﾜｯｼｬ | 1 | A<br>-1997.1 |
| - | Z-9-0915-0506-0 | | WASHER | ﾜｯｼｬ | 1 | B<br>1999.4- |
| 9 | Z-1-09300-053-0 | | STUD | ｽﾀｯﾄﾞ | 1 | A,C,D,J |

# FIG. 43 ELECTRICAL PARTS,FOOT & HANGER
エレクトリカルパーツ,フット&ハンガー

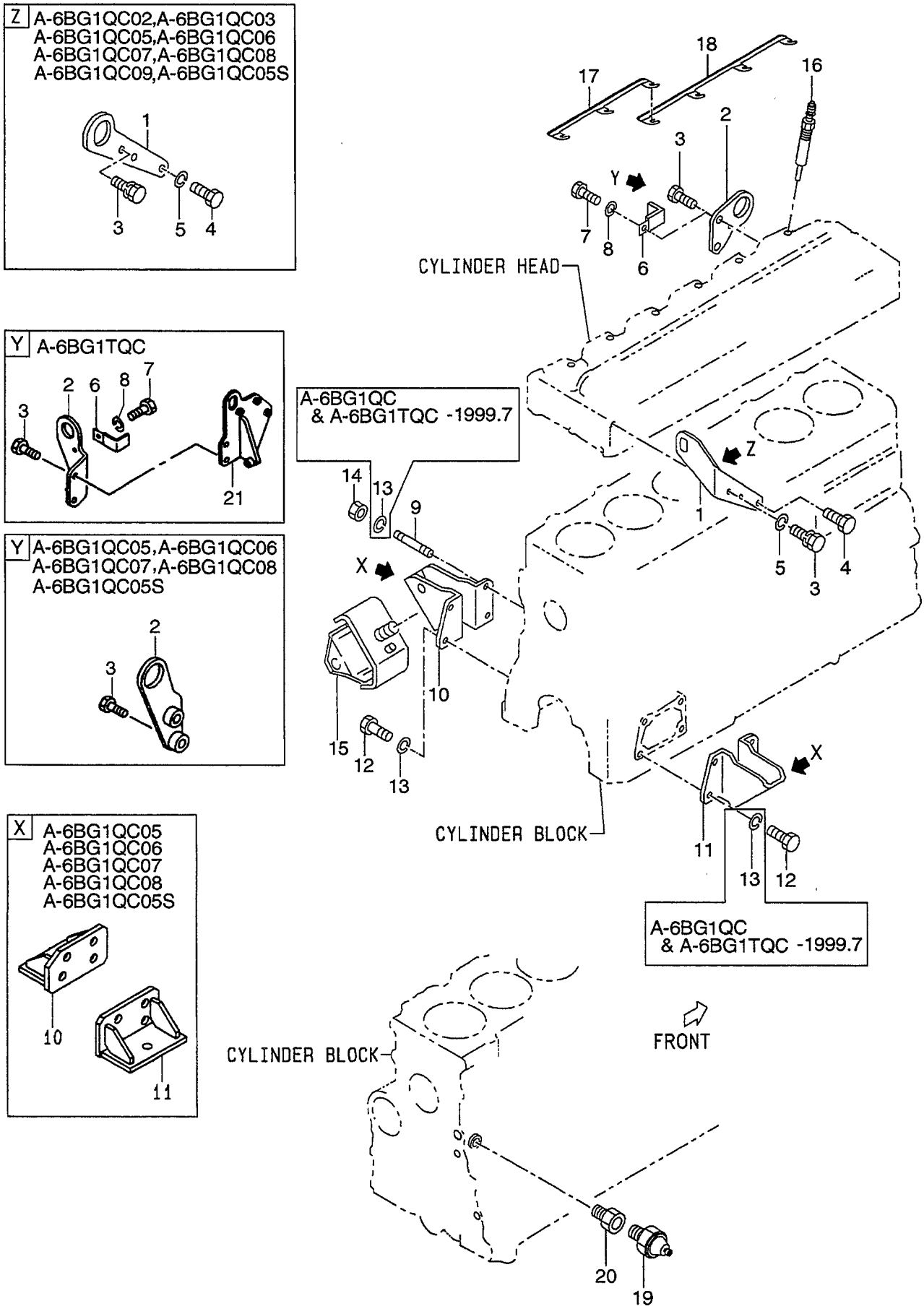

A: A-6BG1QC
B: A-6BG1TQC
C: A-6BG1QC02
D: A-6BG1QC03
E: A-6BG1QC05
F: A-6BG1QC06
G: A-6BG1QC07
H: A-6BG1QC08
J: A-6BG1QC09
K: A-6BG1QC05S

**FIG. 43**

| Item No. 見出番号 | Part No. 部品番号 | Mark 記号 | Description 部品名称 | | Req'd 個数 | Remarks : serial No. 備考：実施号車 |
|---|---|---|---|---|---|---|
| 9 | Z-1-09300-053-0 | | STUD | ｽﾀｯﾄﾞ | 1 | B<br>-2000.5 |
| - | Z-1-09330-055-0 | | STUD | ｽﾀｯﾄﾞ | 1 | B<br>2000.6- |
| - | Z-1-09300-055-0 | | STUD | ｽﾀｯﾄﾞ | 1 | E,F,G,H,K |
| 10 | Z-1-11771-156-1 | | FOOT | ﾌｯﾄ | 1 | A,B,C,D,J |
| - | Z-1-11771-181-0 | | BRACKET,LH | ﾌﾞﾗｹｯﾄ | 1 | E,F,G,H,K |
| 11 | Z-1-11771-157-1 | | FOOT | ﾌｯﾄ | 1 | A,B,C,D,J |
| - | Z-1-11771-113-1 | | BRACKET,RH | ﾌﾞﾗｹｯﾄ | 1 | E,F,G,H,K |
| 12 | Z-9-0206-1022-0 | | BOLT | ﾎﾞﾙﾄ | 7 | A & B<br>-1997.7 |
| - | Z-0-2869-1025-0 | | BOLT | ﾎﾞﾙﾄ | 7 | A & B<br>1997.8- |
| - | Z-0-2869-1025-0 | | BOLT | ﾎﾞﾙﾄ | 7 | C,D,J |
| - | Z-9-0206-1028-0 | | BOLT | ﾎﾞﾙﾄ | 7 | E,F,G,H,K |
| 13 | Z-9-0915-0510-0 | | WASHER | ﾜｯｼｬ | 8 | A & B<br>-1997.7 |
| - | Z-9-0915-0510-0 | | WASHER | ﾜｯｼｬ | 1 | A & B<br>1997.8- |
| - | Z-9-0915-0510-0 | | WASHER | ﾜｯｼｬ | 1 | C,D,E,F,G,H,J,K |
| 14 | Z-9-0911-0510-0 | | NUT | ﾅｯﾄ | 1 | |
| 15 | Z-1-53215-126-0 | | RUBBER,CUSHION | ﾗﾊﾞｰ | 2 | A,B,C,D,J |
| 16 | Z-8-97047-604-0 | | PLUG,GLOW | ﾌﾟﾗｸﾞ | 6 | A & B<br>-1999.3 |
| - | Z-9-8251-3928-9 | | PLUG,GLOW | ﾌﾟﾗｸﾞ | 6 | C & D & E & F & G &<br>H & J & K<br>-1998.9 |
| - | Z-1-82513-043-0 | | PLUG,GLOW | ﾌﾟﾗｸﾞ | 6 | C & D & E & F & G &<br>H & J & K<br>1998.10-1999.3 |
| - | Z-1-82513-043-1 | | PLUG,GLOW | ﾌﾟﾗｸﾞ | 6 | 1999.4- |
| 17 | Z-5-19732-001-2 | | CONNECTOR | ｺﾈｸﾀ | 1 | |
| 18 | Z-5-19732-002-2 | | CONNECTOR | ｺﾈｸﾀ | 1 | |
| A | Z-5-82410-012-2 | | SWITCH ASSY,<br>OIL PRESSURE | ｽｲｯﾁｱｯｾﾝ | 1 | C,D,E,F,G,H,J,K<br>INC.19,20 |
| 19 | Z-1-82410-008-2 | | SWITCH,OIL PRESSURE | ｽｲｯﾁ | 1 | A |
| - | Z-1-82410-008-2 | | SWITCH,OIL PRESSURE | ｽｲｯﾁ | 1 | C,D,E,F,G,H,J,K |
| 20 | Z-9-09902-238-0 | | ADAPTER | ｱﾀﾞﾌﾟﾀ | 1 | C,D,E,F,G,H,J,K |
| 21 | Z-1-11777-221-0 | | HANGER | ﾊﾝｶﾞ | 1 | B<br>1999.4- |

# PARTS NUMBER INDEX 部品番号索引表

| 部品番号 PART No. | 図番号 FIG.NO. | 部品番号 PART No. | 図番号 FIG.NO. | 部品番号 PART No. | 図番号 FIG.NO. | 部品番号 PART No. | 図番号 FIG.NO. |
|---|---|---|---|---|---|---|---|
| Z-0-1080-5860-0 | 29 | Z-0-2868-0825-0 | 43 | Z-0-5004-1025-0 | 29 | Z-1-09330-055-0 | 43 |
| Z-0-1080-5860-0 | 30 | Z-0-2868-0825-0 | 43 | Z-0-5004-1025-0 | 30 | Z-1-09330-077-1 | 3 |
| Z-0-1080-5860-0 | 30 | Z-0-2868-0830-0 | 10 | Z-0-5004-1025-0 | 35 | Z-1-09337-027-0 | 7 |
| Z-0-1080-6065-0 | 22 | Z-0-2868-0840-0 | 14 | Z-0-5004-1025-0 | 43 | Z-1-09360-439-1 | 2 |
| Z-0-1080-6070-0 | 10 | Z-0-2868-0840-0 | 14 | Z-0-5004-1035-0 | 21 | Z-1-09360-439-1 | 2 |
| Z-0-1080-6080-0 | 22 | Z-0-2868-1020-0 | 1 | Z-0-5004-1035-0 | 35 | Z-1-09360-752-0 | 7 |
| Z-0-1080-6090-0 | 22 | Z-0-2868-1020-0 | 25 | Z-0-5004-1035-0 | 43 | Z-1-09360-782-0 | 10 |
| Z-0-1080-6095-0 | 23 | Z-0-2868-1020-0 | 29 | Z-0-5004-1040-0 | 35 | Z-1-09400-027-0 | 13 |
| Z-0-1080-6095-0 | 23 | Z-0-2868-1020-0 | 29 | Z-0-5004-1040-0 | 43 | Z-1-09400-027-0 | 13 |
| Z-0-1080-6455-0 | 13 | Z-0-2868-1020-0 | 30 | Z-0-5004-1050-0 | 21 | Z-1-09400-041-0 | 12 |
| Z-0-1081-0860-0 | 29 | Z-0-2868-1020-0 | 43 | Z-0-5005-1025-0 | 14 | Z-1-09400-116-0 | 8 |
| Z-0-1081-0860-0 | 30 | Z-0-2868-1025-0 | 13 | Z-0-5014-0818-0 | 27 | Z-1-09420-005-0 | 10 |
| Z-0-1081-0875-0 | 29 | Z-0-2868-1025-0 | 15 | Z-0-5014-0820-0 | 1 | Z-1-09440-040-1 | 10 |
| Z-0-1081-0875-0 | 30 | Z-0-2868-1025-0 | 15 | Z-0-5014-0822-0 | 1 | Z-1-09440-040-1 | 11 |
| Z-0-1081-1055-0 | 8 | Z-0-2868-1025-0 | 35 | Z-0-5014-0825-0 | 4 | Z-1-09468-002-1 | 25 |
| Z-0-2080-0610-0 | 43 | Z-0-2868-1025-0 | 43 | Z-0-5014-0825-0 | 23 | Z-1-09500-008-0 | 13 |
| Z-0-2080-0625-0 | 2 | Z-0-2868-1025-0 | 43 | Z-0-5014-0825-0 | 27 | Z-1-09500-008-0 | 13 |
| Z-0-2080-1016-0 | 2 | Z-0-2868-1035-0 | 17 | Z-0-5014-0825-0 | 43 | Z-1-09503-033-1 | 10 |
| Z-0-2080-1020-0 | 25 | Z-0-2868-1035-0 | 17A | Z-0-5014-0828-0 | 9 | Z-1-09503-070-0 | 21 |
| Z-0-2080-1022-0 | 10 | Z-0-2868-1035-0 | 21 | Z-0-5014-0828-0 | 9 | Z-1-09580-335-0 | 8 |
| Z-0-2080-1025-0 | 23 | Z-0-2868-1035-0 | 21 | Z-0-5014-0828-0 | 10 | Z-1-09600-005-1 | 7 |
| Z-0-2080-1425-0 | 43 | Z-0-2868-1035-0 | 23 | Z-0-5014-0828-0 | 10 | Z-1-09600-012-1 | 1 |
| Z-0-2080-1425-0 | 43 | Z-0-2868-1035-0 | 23 | Z-0-5014-0828-0 | 11 | Z-1-09600-016-0 | 7 |
| Z-0-2080-1430-0 | 43 | Z-0-2868-1035-0 | 23 | Z-0-5014-0828-0 | 11 | Z-1-09600-016-0 | 7 |
| Z-0-2080-1430-0 | 43 | Z-0-2868-1035-0 | 35 | Z-0-5014-0828-0 | 24 | Z-1-09600-052-0 | 1 |
| Z-0-2808-0610-0 | 43 | Z-0-2868-1035-0 | 35 | Z-0-5014-0828-0 | 24 | Z-1-09604-022-0 | 6 |
| Z-0-2808-0610-0 | 43 | Z-0-2868-1040-0 | 13 | Z-0-5014-0828-0 | 24 | Z-1-09604-074-0 | 4 |
| Z-0-2808-0612-0 | 4 | Z-0-2868-1040-0 | 17 | Z-0-5014-0830-0 | 10 | Z-1-09604-094-0 | 16 |
| Z-0-2808-0612-0 | 4 | Z-0-2868-1040-0 | 35 | Z-0-5014-0835-0 | 24 | Z-1-09604-094-0 | 16A |
| Z-0-2808-0812-0 | 14 | Z-0-2868-1040-0 | 35 | Z-0-5014-0845-0 | 24 | Z-1-09605-066-0 | 1 |
| Z-0-2808-0812-0 | 20 | Z-0-2868-1040-0 | 43 | Z-0-5014-0845-0 | 24 | Z-1-09605-068-1 | 1 |
| Z-0-2808-0816-0 | 27 | Z-0-2869-1025-0 | 43 | Z-0-5014-0850-0 | 24 | Z-1-09605-079-1 | 1 |
| Z-0-2808-0825-0 | 27 | Z-0-2869-1025-0 | 43 | Z-0-5014-1025-0 | 13 | Z-1-09623-013-0 | 31 |
| Z-0-2808-0840-0 | 14 | Z-0-2878-1025-0 | 14 | Z-0-5014-1035-0 | 23 | Z-1-09623-052-0 | 31 |
| Z-0-2808-0840-0 | 14 | Z-0-2888-1450-0 | 13 | Z-0-5014-1040-0 | 17 | Z-1-09623-057-0 | 6 |
| Z-0-2808-0845-0 | 4 | Z-0-2889-1445-0 | 5 | Z-0-9115-0208-0 | 2 | Z-1-09623-163-0 | 16 |
| Z-0-2808-0845-0 | 4 | Z-0-2889-1445-0 | 5 | Z-0-9116-0214-0 | 5 | Z-1-09623-163-0 | 16A |
| Z-0-2808-0850-0 | 4 | Z-0-2889-1460-0 | 5 | Z-0-9116-0214-0 | 5 | Z-1-09623-163-0 | 17 |
| Z-0-2808-0850-0 | 4 | Z-0-2889-1460-0 | 5 | Z-1-09000-133-1 | 35 | Z-1-09623-163-0 | 17A |
| Z-0-2808-0850-0 | 14 | Z-0-5004-0612-0 | 4 | Z-1-09000-199-1 | 13 | Z-1-09623-163-0 | 18 |
| Z-0-2808-1016-0 | 2 | Z-0-5004-0614-0 | 4 | Z-1-09000-282-1 | 19 | Z-1-09623-179-0 | 6 |
| Z-0-2808-1020-0 | 10 | Z-0-5004-0625-0 | 14 | Z-1-09000-469-2 | 1 | Z-1-09623-283-0 | 4 |
| Z-0-2808-1020-0 | 29 | Z-0-5004-0630-0 | 25 | Z-1-09000-567-0 | 8 | Z-1-09623-462-0 | 14 |
| Z-0-2808-1025-0 | 35 | Z-0-5004-0630-0 | 25 | Z-1-09009-119-0 | 4 | Z-1-09623-465-0 | 1 |
| Z-0-2808-1025-0 | 35 | Z-0-5004-0630-0 | 25 | Z-1-09030-091-0 | 24 | Z-1-09623-660-0 | 35 |
| Z-0-2808-1050-0 | 21 | Z-0-5004-0816-0 | 14 | Z-1-09044-047-0 | 15 | Z-1-09625-438-0 | 4 |
| Z-0-2808-1050-0 | 21 | Z-0-5004-0818-0 | 6 | Z-1-09044-071-1 | 20 | Z-1-09625-439-1 | 5 |
| Z-0-2808-1070-0 | 21 | Z-0-5004-0820-0 | 4 | Z-1-09044-074-0 | 20 | Z-1-09625-469-0 | 5 |
| Z-0-2808-1070-0 | 21 | Z-0-5004-0825-0 | 5 | Z-1-09044-075-1 | 20 | Z-1-09630-082-0 | 25 |
| Z-0-2808-5811-0 | 20 | Z-0-5004-0825-0 | 8 | Z-1-09052-018-1 | 2 | Z-1-09630-082-0 | 28 |
| Z-0-2808-6013-0 | 13 | Z-0-5004-0835-0 | 14 | Z-1-09052-022-1 | 2 | Z-1-09630-083-0 | 14 |
| Z-0-2808-6015-0 | 19 | Z-0-5004-0840-0 | 14 | Z-1-09070-100-1 | 7 | Z-1-09630-085-0 | 1 |
| Z-0-2809-0800-0 | 20 | Z-0-5004-0845-0 | 4 | Z-1-09070-101-0 | 7 | Z-1-09630-085-0 | 6 |
| Z-0-2868-0820-0 | 1 | Z-0-5004-0850-0 | 14 | Z-1-09100-032-0 | 12 | Z-1-09630-085-0 | 14 |
| Z-0-2868-0820-0 | 1 | Z-0-5004-0870-0 | 24 | Z-1-09100-033-0 | 12 | Z-1-09630-085-0 | 25 |
| Z-0-2868-0820-0 | 4 | Z-0-5004-1020-0 | 1 | Z-1-09100-034-0 | 12 | Z-1-09630-085-0 | 25 |
| Z-0-2868-0820-0 | 4 | Z-0-5004-1020-0 | 29 | Z-1-09300-018-0 | 7 | Z-1-09630-085-0 | 25 |
| Z-0-2868-0825-0 | 4 | Z-0-5004-1020-0 | 29 | Z-1-09300-053-0 | 43 | Z-1-09630-085-0 | 25 |
| Z-0-2868-0825-0 | 4 | Z-0-5004-1020-0 | 30 | Z-1-09300-053-0 | 43 | Z-1-09630-085-0 | 26 |
| Z-0-2868-0825-0 | 4 | Z-0-5004-1025-0 | 15 | Z-1-09300-055-0 | 43 | Z-1-09630-085-0 | 31 |

# PARTS NUMBER INDEX 部品番号索引表

| 部品番号 PART No. | 図番号 FIG.NO. | 部品番号 PART No. | 図番号 FIG.NO. | 部品番号 PART No. | 図番号 FIG.NO. | 部品番号 PART No. | 図番号 FIG.NO. |
|---|---|---|---|---|---|---|---|
| Z-1-09630-085-0 | 33 | Z-1-11261-389-0 | 1 | Z-1-12111-918-0 | 3 | Z-1-13211-211-0 | 27 |
| Z-1-09630-085-0 | 33 | Z-1-11281-028-1 | 24 | Z-1-12111-932-0 | 3 | Z-1-13212-087-1 | 26 |
| Z-1-09630-115-0 | 1 | Z-1-11281-036-0 | 24 | Z-1-12111-933-0 | 3 | Z-1-13212-093-1 | 16A |
| Z-1-09637-058-1 | 14 | Z-1-11281-037-0 | 24 | Z-1-12121-101-1 | 3 | Z-1-13212-120-0 | 19 |
| Z-1-09637-060-0 | 14 | Z-1-11282-014-0 | 24 | Z-1-12121-115-0 | 3 | Z-1-13212-130-0 | 18 |
| Z-1-09637-061-0 | 9 | Z-1-11282-014-0 | 24 | Z-1-12211-033-2 | 3 | Z-1-13212-140-1 | 27 |
| Z-1-09637-061-0 | 11 | Z-1-11282-018-0 | 24 | Z-1-12230-104-1 | 3 | Z-1-13219-150-0 | 16 |
| Z-1-09660-101-0 | 1 | Z-1-11282-020-0 | 24 | Z-1-12230-129-1 | 3 | Z-1-13219-150-0 | 17 |
| Z-1-09660-119-2 | 21 | Z-1-11282-025-0 | 24 | Z-1-12235-027-1 | 3 | Z-1-13219-152-0 | 16 |
| Z-1-09660-119-2 | 21 | Z-1-11282-028-1 | 24 | Z-1-12251-027-0 | 3 | Z-1-13219-152-0 | 17 |
| Z-1-09666-036-0 | 1 | Z-1-11282-029-0 | 24 | Z-1-12251-032-0 | 3 | Z-1-13219-152-0 | 17 |
| Z-1-09675-037-1 | 25 | Z-1-11282-029-0 | 24 | Z-1-12310-448-0 | 3 | Z-1-13219-188-0 | 16 |
| Z-1-09675-037-1 | 28 | Z-1-11290-245-1 | 2 | Z-1-12310-470-0 | 3 | Z-1-13219-188-0 | 17 |
| Z-1-09675-063-0 | 25 | Z-1-11291-080-1 | 2 | Z-1-12331-149-5 | 3 | Z-1-13219-190-0 | 16 |
| Z-1-09675-063-0 | 33 | Z-1-11321-079-0 | 4 | Z-1-12331-178-4 | 3 | Z-1-13219-190-0 | 17 |
| Z-1-09675-077-0 | 14 | Z-1-11322-060-0 | 4 | Z-1-12331-267-0 | 3 | Z-1-13219-191-0 | 16 |
| Z-1-09675-081-0 | 14 | Z-1-11327-036-0 | 4 | Z-1-12333-017-0 | 3 | Z-1-13219-191-0 | 17 |
| Z-1-09675-086-0 | 1 | Z-1-11341-433-2 | 5 | Z-1-12333-017-0 | 3 | Z-1-13219-192-0 | 16 |
| Z-1-09675-086-0 | 14 | Z-1-11341-433-3 | 5 | Z-1-12362-003-1 | 3 | Z-1-13219-192-0 | 17 |
| Z-1-09675-086-0 | 25 | Z-1-11341-582-0 | 5 | Z-1-12371-158-0 | 3 | Z-1-13219-235-0 | 16 |
| Z-1-09675-086-0 | 25 | Z-1-11360-439-2 | 6 | Z-1-12371-242-0 | 3 | Z-1-13219-235-0 | 17 |
| Z-1-09675-132-0 | 6 | Z-1-11367-100-0 | 6 | Z-1-12371-248-0 | 3 | Z-1-13219-295-0 | 16 |
| Z-1-09680-024-0 | 1 | Z-1-11510-074-3 | 3 | Z-1-12371-364-1 | 3 | Z-1-13219-295-0 | 17 |
| Z-1-09700-453-0 | 29 | Z-1-11530-074-1 | 3 | Z-1-12514-005-0 | 8 | Z-1-13240-075-0 | 16A |
| Z-1-09701-242-0 | 14 | Z-1-11540-074-1 | 3 | Z-1-12521-008-0 | 3 | Z-1-13240-122-0 | 17A |
| Z-1-09704-057-0 | 2 | Z-1-11680-001-3 | 3 | Z-1-12521-008-0 | 3 | Z-1-13240-123-0 | 17A |
| Z-1-09707-084-1 | 7 | Z-1-11711-043-0 | 7 | Z-1-12522-016-2 | 8 | Z-1-13260-001-1 | 25 |
| Z-1-09740-078-0 | 1 | Z-1-11715-054-0 | 7 | Z-1-12523-057-3 | 8 | Z-1-13260-047-0 | 26 |
| Z-1-09800-214-0 | 3 | Z-1-11740-171-0 | 2 | Z-1-12524-015-0 | 34 | Z-1-13260-062-1 | 16 |
| Z-1-11110-601-1 | 7 | Z-1-11740-174-1 | 6 | Z-1-12551-083-0 | 8 | Z-1-13260-062-1 | 16A |
| Z-1-11110-614-2 | 7 | Z-1-11740-201-1 | 6 | Z-1-12552-025-1 | 8 | Z-1-13260-062-1 | 17 |
| Z-1-11110-614-2 | 7 | Z-1-11740-204-1 | 6 | Z-1-12552-111-0 | 8 | Z-1-13260-062-1 | 18 |
| Z-1-11110-842-0 | 7 | Z-1-11740-226-1 | 2 | Z-1-12561-099-0 | 8 | Z-1-13260-076-0 | 16 |
| Z-1-11141-196-0 | 7 | Z-1-11740-252-0 | 2 | Z-1-12569-015-0 | 7 | Z-1-13260-076-0 | 17 |
| Z-1-11171-358-1 | 7 | Z-1-11740-253-0 | 2 | Z-1-12575-036-0 | 8 | Z-1-13260-106-0 | 17A |
| Z-1-11173-055-0 | 7 | Z-1-11740-272-0 | 2 | Z-1-12611-118-0 | 8 | Z-1-13262-008-0 | 16 |
| Z-1-11173-059-0 | 7 | Z-1-11742-011-0 | 2 | Z-1-12611-249-0 | 8 | Z-1-13262-008-0 | 17 |
| Z-1-11179-094-0 | 7 | Z-1-11742-022-1 | 2 | Z-1-12621-062-1 | 8 | Z-1-13311-532-2 | 14 |
| Z-1-11179-099-0 | 7 | Z-1-11750-012-0 | 6 | Z-1-12621-094-0 | 8 | Z-1-13312-469-0 | 14 |
| Z-1-11180-132-2 | 7 | Z-1-11750-024-1 | 6 | Z-1-13100-204-0 | 15 | Z-1-13312-470-1 | 14 |
| Z-1-11180-350-0 | 7 | Z-1-11750-024-1 | 6 | Z-1-13113-047-0 | 15 | Z-1-13313-565-0 | 14 |
| Z-1-11210-340-8 | 1 | Z-1-11760-280-2 | 6 | Z-1-13119-003-0 | 15 | Z-1-13313-599-0 | 14 |
| Z-1-11210-443-7 | 1 | Z-1-11760-378-0 | 6 | Z-1-13123-016-0 | 15 | Z-1-13313-603-0 | 14 |
| Z-1-11219-129-1 | 1 | Z-1-11766-274-1 | 6 | Z-1-13128-018-0 | 15 | Z-1-13313-604-1 | 14 |
| Z-1-11219-163-0 | 1 | Z-1-11766-402-0 | 6 | Z-1-13140-079-0 | 15 | Z-1-13313-611-0 | 14 |
| Z-1-11261-248-0 | 1 | Z-1-11771-113-1 | 43 | Z-1-13161-012-0 | 1 | Z-1-13342-110-0 | 1 |
| Z-1-11261-249-0 | 1 | Z-1-11771-156-1 | 43 | Z-1-13200-550-3 | 16A | Z-1-13342-132-0 | 1 |
| Z-1-11261-250-0 | 1 | Z-1-11771-157-1 | 43 | Z-1-13200-551-2 | 18 | Z-1-13610-876-1 | 22 |
| Z-1-11261-251-0 | 1 | Z-1-11771-181-0 | 43 | Z-1-13200-654-2 | 19 | Z-1-13620-023-0 | 21 |
| Z-1-11261-252-0 | 1 | Z-1-11777-106-0 | 43 | Z-1-13200-655-6 | 16 | Z-1-13620-023-0 | 22 |
| Z-1-11261-253-0 | 1 | Z-1-11777-110-1 | 43 | Z-1-13200-701-2 | 26 | Z-1-13631-074-0 | 21 |
| Z-1-11261-254-0 | 1 | Z-1-11777-171-1 | 43 | Z-1-13200-701-2 | 26 | Z-1-13641-165-0 | 20 |
| Z-1-11261-255-0 | 1 | Z-1-11777-221-0 | 43 | Z-1-13200-702-1 | 26 | Z-1-13641-187-0 | 20 |
| Z-1-11261-382-0 | 1 | Z-1-12111-769-0 | 3 | Z-1-13200-746-4 | 17 | Z-1-13641-187-0 | 20 |
| Z-1-11261-383-0 | 1 | Z-1-12111-770-0 | 3 | Z-1-13200-809-1 | 17A | Z-1-13642-030-0 | 20 |
| Z-1-11261-384-0 | 1 | Z-1-12111-785-0 | 3 | Z-1-13200-841-0 | 27 | Z-1-13642-031-0 | 20 |
| Z-1-11261-385-0 | 1 | Z-1-12111-786-0 | 3 | Z-1-13211-147-1 | 16 | Z-1-13642-033-0 | 20 |
| Z-1-11261-386-0 | 1 | Z-1-12111-911-0 | 3 | Z-1-13211-149-1 | 16 | Z-1-13642-036-0 | 20 |
| Z-1-11261-387-0 | 1 | Z-1-12111-912-0 | 3 | Z-1-13211-163-1 | 17 | Z-1-13642-044-1 | 20 |
| Z-1-11261-388-0 | 1 | Z-1-12111-917-0 | 3 | Z-1-13211-204-1 | 17A | Z-1-13642-044-1 | 20 |

# PARTS NUMBER INDEX 部品番号索引表

| 部品番号 PART No. | 図番号 FIG.NO. | 部品番号 PART No. | 図番号 FIG.NO. | 部品番号 PART No. | 図番号 FIG.NO. | 部品番号 PART No. | 図番号 FIG.NO. |
|---|---|---|---|---|---|---|---|
| Z-1-13642-052-0 | 20 | Z-1-14450-053-0 | 12 | Z-1-15619-191-0 | 31 | Z-1-15729-101-0 | 32 |
| Z-1-13642-054-0 | 20 | Z-1-14451-057-0 | 12 | Z-1-15619-237-0 | 31 | Z-1-15729-101-0 | 32 |
| Z-1-13642-056-0 | 20 | Z-1-14453-083-0 | 12 | Z-1-15619-243-0 | 31 | Z-1-15729-172-0 | 32 |
| Z-1-13650-018-1 | 21 | Z-1-14453-084-0 | 12 | Z-1-15619-246-0 | 34 | Z-1-15729-172-0 | 32 |
| Z-1-13650-090-1 | 22 | Z-1-14453-085-0 | 12 | Z-1-15619-247-0 | 34 | Z-1-15729-226-0 | 32 |
| Z-1-13671-209-0 | 20 | Z-1-14453-086-0 | 12 | Z-1-15619-282-0 | 31 | Z-1-15729-279-0 | 32 |
| Z-1-13671-288-0 | 20 | Z-1-14455-041-0 | 12 | Z-1-15619-282-0 | 32 | Z-1-15729-294-0 | 32 |
| Z-1-13671-302-0 | 20 | Z-1-14455-042-0 | 12 | Z-1-15619-282-0 | 32 | Z-1-15729-295-0 | 32 |
| Z-1-13671-443-0 | 20 | Z-1-15300-291-2 | 25 | Z-1-15619-326-0 | 31 | Z-1-15729-296-0 | 32 |
| Z-1-13674-118-1 | 35 | Z-1-15300-291-2 | 28 | Z-1-15621-070-0 | 31 | Z-1-15729-297-0 | 32 |
| Z-1-13713-037-0 | 23 | Z-1-15300-331-0 | 25 | Z-1-15622-003-0 | 31 | Z-1-15729-298-0 | 32 |
| Z-1-13713-037-0 | 23 | Z-1-15300-331-0 | 28 | Z-1-15622-006-0 | 31 | Z-1-15729-299-0 | 32 |
| Z-1-13716-194-0 | 23 | Z-1-15300-375-0 | 25 | Z-1-15629-001-0 | 31 | Z-1-15729-301-0 | 32 |
| Z-1-13721-341-2 | 1 | Z-1-15300-375-0 | 28 | Z-1-15629-002-0 | 31 | Z-1-15729-636-0 | 32 |
| Z-1-13741-013-0 | 23 | Z-1-15311-263-0 | 28 | Z-1-15629-003-0 | 31 | Z-1-15729-642-0 | 32 |
| Z-1-13743-016-0 | 23 | Z-1-15332-017-0 | 28 | Z-1-15629-004-0 | 31 | Z-1-15729-643-0 | 32 |
| Z-1-13770-070-0 | 23 | Z-1-15339-009-0 | 28 | Z-1-15629-007-0 | 31 | Z-1-15729-644-0 | 32 |
| Z-1-13770-070-0 | 23 | Z-1-15339-009-0 | 28 | Z-1-15629-008-0 | 31 | Z-1-15729-689-0 | 32 |
| Z-1-13770-071-0 | 23 | Z-1-15339-010-0 | 28 | Z-1-15629-010-0 | 31 | Z-1-15729-891-0 | 32 |
| Z-1-13770-071-0 | 23 | Z-1-15339-010-0 | 28 | Z-1-15629-015-0 | 31 | Z-1-15729-892-0 | 32 |
| Z-1-14110-507-1 | 11 | Z-1-15412-471-1 | 25 | Z-1-15629-017-0 | 31 | Z-1-15729-893-0 | 32 |
| Z-1-14112-180-3 | 9 | Z-1-15414-294-0 | 25 | Z-1-15629-018-0 | 31 | Z-1-15729-960-0 | 31 |
| Z-1-14112-180-3 | 10 | Z-1-15414-295-0 | 25 | Z-1-15629-047-0 | 31 | Z-1-15730-009-0 | 29 |
| Z-1-14112-209-3 | 9 | Z-1-15414-296-2 | 25 | Z-1-15629-105-0 | 31 | Z-1-15730-009-0 | 32 |
| Z-1-14112-209-3 | 10 | Z-1-15415-183-1 | 25 | Z-1-15631-026-0 | 32 | Z-1-15730-041-0 | 29 |
| Z-1-14112-315-0 | 9 | Z-1-15415-184-1 | 25 | Z-1-15631-069-0 | 31 | Z-1-15730-041-0 | 30 |
| Z-1-14112-315-0 | 11 | Z-1-15415-185-1 | 25 | Z-1-15634-007-0 | 31 | Z-1-15730-041-0 | 32 |
| Z-1-14112-515-0 | 11 | Z-1-15415-186-1 | 25 | Z-1-15634-011-0 | 31 | Z-1-15730-042-0 | 29 |
| Z-1-14112-622-1 | 10 | Z-1-15415-187-1 | 25 | Z-1-15639-003-0 | 31 | Z-1-15730-042-0 | 29 |
| Z-1-14115-059-0 | 9 | Z-1-15415-188-1 | 25 | Z-1-15639-022-0 | 31 | Z-1-15730-042-0 | 32 |
| Z-1-14115-059-0 | 10 | Z-1-15415-810-2 | 25 | Z-1-15639-023-0 | 31 | Z-1-15730-042-0 | 32 |
| Z-1-14115-059-0 | 11 | Z-1-15415-844-0 | 25 | Z-1-15639-088-0 | 31 | Z-1-15730-055-0 | 29 |
| Z-1-14115-061-0 | 9 | Z-1-15415-845-0 | 25 | Z-1-15639-088-0 | 31 | Z-1-15730-055-0 | 30 |
| Z-1-14115-061-0 | 10 | Z-1-15415-846-0 | 25 | Z-1-15641-031-0 | 31 | Z-1-15730-055-0 | 32 |
| Z-1-14115-061-0 | 11 | Z-1-15415-847-0 | 25 | Z-1-15644-009-0 | 31 | Z-1-15730-055-0 | 32 |
| Z-1-14141-690-0 | 9 | Z-1-15415-848-0 | 25 | Z-1-15649-001-0 | 31 | Z-1-15750-154-0 | 29 |
| Z-1-14141-692-1 | 10 | Z-1-15415-849-0 | 25 | Z-1-15649-005-0 | 31 | Z-1-15750-154-0 | 33 |
| Z-1-14141-791-2 | 10 | Z-1-15415-850-0 | 25 | Z-1-15719-093-0 | 31 | Z-1-15750-162-0 | 29 |
| Z-1-14141-901-0 | 11 | Z-1-15415-851-1 | 25 | Z-1-15721-023-0 | 32 | Z-1-15750-162-0 | 30 |
| Z-1-14144-605-0 | 10 | Z-1-15415-852-1 | 25 | Z-1-15721-023-0 | 32 | Z-1-15750-162-0 | 33 |
| Z-1-14145-069-0 | 13 | Z-1-15415-884-0 | 25 | Z-1-15722-017-0 | 32 | Z-1-15751-012-0 | 33 |
| Z-1-14145-091-0 | 13 | Z-1-15602-969-0 | 29 | Z-1-15723-028-0 | 32 | Z-1-15754-002-0 | 33 |
| Z-1-14145-114-0 | 9 | Z-1-15603-040-0 | 29 | Z-1-15723-186-0 | 32 | Z-1-15755-002-0 | 33 |
| Z-1-14145-114-0 | 10 | Z-1-15603-260-0 | 29 | Z-1-15723-212-0 | 32 | Z-1-15759-002-0 | 33 |
| Z-1-14145-114-0 | 11 | Z-1-15603-261-0 | 29 | Z-1-15723-223-0 | 32 | Z-1-15759-003-0 | 33 |
| Z-1-14145-140-0 | 10 | Z-1-15603-261-0 | 29 | Z-1-15723-224-0 | 32 | Z-1-15759-011-0 | 31 |
| Z-1-14149-084-2 | 10 | Z-1-15603-300-0 | 30 | Z-1-15723-284-0 | 32 | Z-1-15759-011-0 | 33 |
| Z-1-14149-170-1 | 10 | Z-1-15603-301-0 | 29 | Z-1-15723-369-0 | 32 | Z-1-15759-029-0 | 33 |
| Z-1-14149-170-1 | 11 | Z-1-15603-301-0 | 30 | Z-1-15723-432-0 | 32 | Z-1-15759-042-0 | 33 |
| Z-1-14149-212-0 | 10 | Z-1-15603-302-0 | 30 | Z-1-15725-011-0 | 32 | Z-1-15759-043-0 | 33 |
| Z-1-14362-002-0 | 7 | Z-1-15611-184-0 | 31 | Z-1-15725-344-0 | 32 | Z-1-15761-006-0 | 33 |
| Z-1-14379-088-0 | 12 | Z-1-15612-050-0 | 31 | Z-1-15725-449-0 | 32 | Z-1-15770-870-0 | 29 |
| Z-1-14400-333-2 | 10 | Z-1-15619-003-0 | 31 | Z-1-15725-917-0 | 32 | Z-1-15770-870-0 | 32 |
| Z-1-14400-333-2 | 12 | Z-1-15619-024-0 | 31 | Z-1-15729-001-0 | 32 | Z-1-15779-040-0 | 32 |
| Z-1-14414-093-0 | 12 | Z-1-15619-033-0 | 31 | Z-1-15729-002-0 | 32 | Z-1-15779-093-0 | 32 |
| Z-1-14414-094-0 | 12 | Z-1-15619-092-0 | 31 | Z-1-15729-015-0 | 32 | Z-1-15779-094-0 | 32 |
| Z-1-14414-095-0 | 12 | Z-1-15619-103-0 | 31 | Z-1-15729-038-0 | 32 | Z-1-15779-191-0 | 32 |
| Z-1-14421-020-0 | 12 | Z-1-15619-160-0 | 31 | Z-1-15729-092-0 | 32 | Z-1-15779-502-0 | 32 |
| Z-1-14421-024-0 | 12 | Z-1-15619-162-0 | 31 | Z-1-15729-098-0 | 32 | Z-1-15779-508-0 | 32 |
| Z-1-14425-029-0 | 12 | Z-1-15619-190-0 | 31 | Z-1-15729-099-0 | 32 | Z-1-15779-562-0 | 32 |

# PARTS NUMBER INDEX 部品番号索引表

| 部品番号 PART No. | 図番号 FIG.NO. | 部品番号 PART No. | 図番号 FIG.NO. | 部品番号 PART No. | 図番号 FIG.NO. | 部品番号 PART No. | 図番号 FIG.NO. |
|---|---|---|---|---|---|---|---|
| Z-1-15779-562-0 | 32 | Z-1-81115-065-0 | 39 | Z-1-81129-397-0 | 36 | Z-1-81229-383-0 | 40 |
| Z-1-15779-564-0 | 32 | Z-1-81115-066-0 | 39 | Z-1-81129-397-0 | 39 | Z-1-81229-383-0 | 41 |
| Z-1-15779-565-0 | 32 | Z-1-81115-236-0 | 38 | Z-1-81129-402-0 | 39 | Z-1-81229-384-0 | 40 |
| Z-1-15779-567-0 | 32 | Z-1-81116-023-0 | 37 | Z-1-81129-403-0 | 39 | Z-1-81229-513-0 | 41 |
| Z-1-15780-168-0 | 29 | Z-1-81116-024-0 | 37 | Z-1-81129-405-0 | 39 | Z-1-81229-516-0 | 41 |
| Z-1-15780-168-0 | 34 | Z-1-81116-042-0 | 36 | Z-1-81129-418-0 | 39 | Z-1-81229-526-0 | 41 |
| Z-1-15780-172-0 | 29 | Z-1-81116-042-0 | 39 | Z-1-81129-677-0 | 38 | Z-1-81229-527-0 | 41 |
| Z-1-15780-172-0 | 30 | Z-1-81116-043-0 | 36 | Z-1-81129-696-0 | 38 | Z-1-81229-539-0 | 40 |
| Z-1-15780-172-0 | 34 | Z-1-81116-043-0 | 39 | Z-1-81129-698-0 | 38 | Z-1-81229-543-0 | 41 |
| Z-1-15781-016-0 | 34 | Z-1-81116-044-0 | 36 | Z-1-81129-706-0 | 39A | Z-1-81229-544-0 | 41 |
| Z-1-15789-094-0 | 34 | Z-1-81116-044-0 | 39 | Z-1-81129-709-0 | 39A | Z-1-81229-556-0 | 41 |
| Z-1-19191-914-0 | 6 | Z-1-81116-060-0 | 39A | Z-1-81129-713-0 | 39A | Z-1-81270-001-0 | 40 |
| Z-1-19387-007-0 | 7 | Z-1-81116-061-0 | 39A | Z-1-81129-713-0 | 39A | Z-1-81270-007-0 | 41 |
| Z-1-19389-004-0 | 7 | Z-1-81116-072-0 | 37 | Z-1-81129-714-0 | 39A | Z-1-81900-137-2 | 29 |
| Z-1-19623-016-0 | 33 | Z-1-81117-014-0 | 36 | Z-1-81129-715-0 | 39A | Z-1-81900-137-2 | 30 |
| Z-1-19623-016-0 | 33 | Z-1-81117-014-0 | 39 | Z-1-81129-722-0 | 39A | Z-1-81910-052-0 | 29 |
| Z-1-19751-049-0 | 31 | Z-1-81118-021-0 | 37 | Z-1-81129-772-0 | 39A | Z-1-82410-008-2 | 43 |
| Z-1-19751-120-0 | 29 | Z-1-81118-036-0 | 36 | Z-1-81129-851-0 | 39A | Z-1-82410-008-2 | 43 |
| Z-1-19751-120-0 | 30 | Z-1-81118-036-0 | 39 | Z-1-81151-034-0 | 38 | Z-1-82513-043-0 | 43 |
| Z-1-19755-094-1 | 27 | Z-1-81118-059-0 | 39A | Z-1-81151-118-0 | 39A | Z-1-82513-043-1 | 43 |
| Z-1-21700-249-2 | 24 | Z-1-81118-060-0 | 39A | Z-1-81200-365-0 | 35 | Z-1-82553-023-0 | 36 |
| Z-1-21700-293-0 | 24 | Z-1-81118-061-0 | 39A | Z-1-81200-365-0 | 41 | Z-1-82553-037-0 | 36 |
| Z-1-21700-298-1 | 24 | Z-1-81118-065-0 | 37 | Z-1-81200-512-0 | 35 | Z-1-83579-492-0 | 32 |
| Z-1-22140-560-2 | 13 | Z-1-81121-025-0 | 37 | Z-1-81200-512-0 | 42 | Z-1-85878-009-0 | 7 |
| Z-1-22140-561-3 | 13 | Z-1-81121-037-0 | 36 | Z-1-81200-525-1 | 35 | Z-1-85886-951-0 | 7 |
| Z-1-22151-466-0 | 13 | Z-1-81121-037-0 | 39 | Z-1-81211-062-0 | 40 | Z-1-85886-952-0 | 7 |
| Z-1-22151-468-4 | 13 | Z-1-81121-052-1 | 38 | Z-1-81211-090-0 | 41 | Z-1-85886-953-0 | 7 |
| Z-1-22151-700-1 | 13 | Z-1-81121-062-0 | 39A | Z-1-81212-003-0 | 40 | Z-1-85888-643-0 | 7 |
| Z-1-22151-714-1 | 13 | Z-1-81122-063-0 | 39A | Z-1-81213-052-0 | 40 | Z-1-85888-678-0 | 7 |
| Z-1-22151-739-0 | 13 | Z-1-81123-009-6 | 37 | Z-1-81213-067-0 | 41 | Z-1-87810-223-5 | 22 |
| Z-1-22151-740-0 | 13 | Z-1-81123-024-0 | 36 | Z-1-81213-102-0 | 42 | Z-1-87810-774-1 | 21 |
| Z-1-22159-120-0 | 13 | Z-1-81123-025-0 | 36 | Z-1-81214-175-0 | 40 | Z-1-87810-945-2 | 7 |
| Z-1-23314-122-0 | 29 | Z-1-81127-031-0 | 36 | Z-1-81214-176-0 | 40 | Z-1-87810-945-2 | 11 |
| Z-1-23335-188-1 | 29 | Z-1-81127-032-0 | 39 | Z-1-81214-224-0 | 41 | Z-1-87810-945-2 | 23 |
| Z-1-23335-188-1 | 29 | Z-1-81129-175-0 | 37 | Z-1-81214-229-0 | 41 | Z-1-87811-031-5 | 1 |
| Z-1-23335-477-0 | 29 | Z-1-81129-176-0 | 37 | Z-1-81214-360-0 | 42 | Z-1-87811-031-5 | 2 |
| Z-1-53215-126-0 | 43 | Z-1-81129-178-0 | 37 | Z-1-81217-062-0 | 41 | Z-1-87811-031-5 | 4 |
| Z-1-81100-141-1 | 35 | Z-1-81129-181-0 | 37 | Z-1-81217-069-0 | 41 | Z-1-87811-031-5 | 5 |
| Z-1-81100-141-1 | 38 | Z-1-81129-184-0 | 36 | Z-1-81219-056-0 | 40 | Z-1-87811-031-5 | 6 |
| Z-1-81100-191-1 | 35 | Z-1-81129-184-0 | 39 | Z-1-81221-056-0 | 40 | Z-1-87811-031-5 | 7 |
| Z-1-81100-191-1 | 36 | Z-1-81129-185-0 | 36 | Z-1-81221-072-0 | 41 | Z-1-87811-031-5 | 9 |
| Z-1-81100-206-1 | 35 | Z-1-81129-196-0 | 36 | Z-1-81221-103-0 | 42 | Z-1-87811-031-5 | 14 |
| Z-1-81100-206-1 | 39 | Z-1-81129-196-0 | 39 | Z-1-81222-055-0 | 40 | Z-1-87811-031-5 | 16 |
| Z-1-81100-343-1 | 35 | Z-1-81129-234-0 | 39 | Z-1-81222-055-0 | 41 | Z-1-87811-031-5 | 16A |
| Z-1-81100-343-1 | 37 | Z-1-81129-299-0 | 36 | Z-1-81222-131-0 | 42 | Z-1-87811-031-5 | 21 |
| Z-1-81100-404-0 | 35 | Z-1-81129-384-0 | 36 | Z-1-81223-005-0 | 40 | Z-1-87811-031-5 | 23 |
| Z-1-81100-404-0 | 39A | Z-1-81129-384-0 | 39 | Z-1-81223-009-0 | 41 | Z-1-87811-031-5 | 24 |
| Z-1-81100-408-0 | 35 | Z-1-81129-385-0 | 36 | Z-1-81229-042-0 | 40 | Z-1-87811-031-5 | 25 |
| Z-1-81111-013-0 | 39A | Z-1-81129-386-0 | 36 | Z-1-81229-114-0 | 36 | Z-1-87811-223-3 | 1 |
| Z-1-81111-013-0 | 39A | Z-1-81129-386-0 | 39 | Z-1-81229-122-0 | 41 | Z-1-87811-223-3 | 2 |
| Z-1-81113-026-0 | 36 | Z-1-81129-387-0 | 36 | Z-1-81229-225-0 | 41 | Z-1-87811-223-3 | 4 |
| Z-1-81113-073-0 | 36 | Z-1-81129-388-0 | 39 | Z-1-81229-373-0 | 40 | Z-1-87811-223-3 | 5 |
| Z-1-81113-075-0 | 39 | Z-1-81129-389-0 | 36 | Z-1-81229-374-0 | 40 | Z-1-87811-223-3 | 6 |
| Z-1-81113-076-0 | 39 | Z-1-81129-389-0 | 39 | Z-1-81229-375-0 | 40 | Z-1-87811-223-3 | 7 |
| Z-1-81113-077-0 | 39 | Z-1-81129-391-0 | 39 | Z-1-81229-376-0 | 40 | Z-1-87811-223-3 | 10 |
| Z-1-81113-133-0 | 39A | Z-1-81129-392-0 | 39 | Z-1-81229-376-0 | 41 | Z-1-87811-223-3 | 14 |
| Z-1-81114-018-0 | 38 | Z-1-81129-394-0 | 36 | Z-1-81229-377-0 | 40 | Z-1-87811-223-3 | 17 |
| Z-1-81114-019-0 | 37 | Z-1-81129-395-0 | 36 | Z-1-81229-380-0 | 40 | Z-1-87811-223-3 | 17A |
| Z-1-81115-061-0 | 36 | Z-1-81129-396-0 | 36 | Z-1-81229-381-0 | 40 | Z-1-87811-223-3 | 21 |
| Z-1-81115-062-0 | 36 | Z-1-81129-396-0 | 39 | Z-1-81229-382-0 | 40 | Z-1-87811-223-3 | 23 |

# PARTS NUMBER INDEX 部品番号索引表

| 部品番号 PART No. | 図番号 FIG.NO. | 部品番号 PART No. | 図番号 FIG.NO. | 部品番号 PART No. | 図番号 FIG.NO. | 部品番号 PART No. | 図番号 FIG.NO. |
|---|---|---|---|---|---|---|---|
| Z-1-87811-223-3 | 24 | Z-1-87811-888-0 | 3 | Z-5-09623-070-0 | 27 | Z-5-13613-006-1 | 22 |
| Z-1-87811-223-3 | 25 | Z-1-87811-889-0 | 1 | Z-5-09625-055-0 | 21 | Z-5-13619-022-1 | 27 |
| Z-1-87811-242-1 | 7 | Z-1-87811-889-0 | 3 | Z-5-09630-024-0 | 27 | Z-5-13620-006-2 | 21 |
| Z-1-87811-242-1 | 9 | Z-1-87811-890-0 | 1 | Z-5-09654-013-0 | 1 | Z-5-13620-006-2 | 22 |
| Z-1-87811-242-1 | 10 | Z-1-87811-890-0 | 3 | Z-5-09666-002-1 | 1 | Z-5-13631-007-1 | 22 |
| Z-1-87811-242-1 | 23 | Z-1-87811-891-0 | 1 | Z-5-09704-031-3 | 2 | Z-5-13634-002-0 | 21 |
| Z-1-87811-253-0 | 21 | Z-1-87811-891-0 | 3 | Z-5-09704-046-0 | 23 | Z-5-13634-005-0 | 22 |
| Z-1-87811-253-0 | 21 | Z-1-87811-903-0 | 1 | Z-5-09704-054-1 | 14 | Z-5-13639-001-0 | 21 |
| Z-1-87811-573-0 | 1 | Z-1-87811-903-0 | 3 | Z-5-09709-103-0 | 25 | Z-5-13641-017-1 | 20 |
| Z-1-87811-573-0 | 3 | Z-1-87811-904-0 | 1 | Z-5-09709-103-0 | 25 | Z-5-13641-038-1 | 20 |
| Z-1-87811-574-0 | 1 | Z-1-87811-904-0 | 3 | Z-5-09709-104-0 | 25 | Z-5-13642-007-2 | 21 |
| Z-1-87811-574-0 | 3 | Z-1-87811-905-0 | 1 | Z-5-09709-104-0 | 25 | Z-5-13642-007-2 | 22 |
| Z-1-87811-575-0 | 1 | Z-1-87811-905-0 | 3 | Z-5-09709-104-0 | 25 | Z-5-13713-009-1 | 23 |
| Z-1-87811-575-0 | 3 | Z-1-87811-906-0 | 1 | Z-5-09738-001-0 | 3 | Z-5-13716-026-0 | 23 |
| Z-1-87811-576-0 | 1 | Z-1-87811-906-0 | 3 | Z-5-09800-008-0 | 22 | Z-5-13716-034-2 | 23 |
| Z-1-87811-576-0 | 3 | Z-1-87811-942-0 | 1 | Z-5-09800-008-0 | 22 | Z-5-13721-014-1 | 23 |
| Z-1-87811-628-3 | 1 | Z-1-87811-942-0 | 3 | Z-5-09800-038-0 | 31 | Z-5-13721-014-1 | 23 |
| Z-1-87811-628-3 | 2 | Z-1-87811-943-0 | 1 | Z-5-09800-038-0 | 31 | Z-5-13721-015-2 | 23 |
| Z-1-87811-628-3 | 4 | Z-1-87811-943-0 | 3 | Z-5-09800-041-0 | 38 | Z-5-14111-110-1 | 9 |
| Z-1-87811-628-3 | 5 | Z-1-87811-944-0 | 1 | Z-5-09800-050-0 | 21 | Z-5-14111-243-4 | 11 |
| Z-1-87811-628-3 | 6 | Z-1-87811-944-0 | 3 | Z-5-09800-051-0 | 21 | Z-5-15311-019-1 | 28 |
| Z-1-87811-628-3 | 7 | Z-1-87811-945-0 | 1 | Z-5-09800-064-0 | 38 | Z-5-15311-027-0 | 28 |
| Z-1-87811-628-3 | 11 | Z-1-87811-945-0 | 3 | Z-5-09843-003-0 | 15 | Z-5-15315-003-0 | 25 |
| Z-1-87811-628-3 | 14 | Z-1-87811-954-0 | 1 | Z-5-11219-014-0 | 1 | Z-5-15332-006-0 | 28 |
| Z-1-87811-628-3 | 18 | Z-1-87811-954-0 | 3 | Z-5-11219-015-0 | 7 | Z-5-15339-060-0 | 28 |
| Z-1-87811-628-3 | 21 | Z-1-87811-955-0 | 1 | Z-5-11257-001-1 | 1 | Z-5-15343-005-0 | 28 |
| Z-1-87811-628-3 | 22 | Z-1-87811-955-0 | 3 | Z-5-11288-001-0 | 24 | Z-5-15411-223-1 | 25 |
| Z-1-87811-628-3 | 23 | Z-1-87811-956-0 | 1 | Z-5-11290-145-1 | 2 | Z-5-15411-223-1 | 25 |
| Z-1-87811-628-3 | 24 | Z-1-87811-956-0 | 3 | Z-5-11290-145-1 | 2 | Z-5-15419-001-0 | 25 |
| Z-1-87811-628-3 | 25 | Z-1-87811-957-0 | 1 | Z-5-11311-011-3 | 4 | Z-5-15611-025-0 | 31 |
| Z-1-87811-690-0 | 3 | Z-1-87811-957-0 | 3 | Z-5-11321-009-0 | 4 | Z-5-15619-001-0 | 31 |
| Z-1-87811-690-1 | 1 | Z-1-87811-962-0 | 1 | Z-5-11321-095-4 | 4 | Z-5-15619-002-0 | 31 |
| Z-1-87811-691-0 | 1 | Z-1-87811-962-0 | 3 | Z-5-11327-003-0 | 4 | Z-5-15619-003-0 | 31 |
| Z-1-87811-691-0 | 3 | Z-1-87811-963-0 | 1 | Z-5-11327-009-0 | 4 | Z-5-15619-004-0 | 31 |
| Z-1-87811-692-0 | 1 | Z-1-87811-963-0 | 3 | Z-5-11327-009-0 | 4 | Z-5-15619-005-0 | 31 |
| Z-1-87811-692-0 | 3 | Z-1-87811-964-0 | 1 | Z-5-11360-377-1 | 6 | Z-5-15619-007-0 | 31 |
| Z-1-87811-693-0 | 1 | Z-1-87811-964-0 | 3 | Z-5-11749-032-1 | 2 | Z-5-15619-008-0 | 31 |
| Z-1-87811-693-0 | 3 | Z-1-87811-965-0 | 1 | Z-5-11749-032-1 | 2 | Z-5-15619-009-0 | 31 |
| Z-1-87811-795-0 | 1 | Z-1-87811-965-0 | 3 | Z-5-11777-055-1 | 43 | Z-5-15619-010-0 | 31 |
| Z-1-87811-795-0 | 3 | Z-5-09000-084-1 | 4 | Z-5-12319-003-2 | 3 | Z-5-15619-011-0 | 31 |
| Z-1-87811-796-0 | 1 | Z-5-09000-222-1 | 30 | Z-5-12331-045-3 | 3 | Z-5-15619-012-0 | 31 |
| Z-1-87811-796-0 | 3 | Z-5-09030-010-1 | 21 | Z-5-12331-052-4 | 3 | Z-5-15619-013-0 | 31 |
| Z-1-87811-797-0 | 1 | Z-5-09300-023-1 | 1 | Z-5-12336-008-1 | 3 | Z-5-15619-015-0 | 31 |
| Z-1-87811-797-0 | 3 | Z-5-09300-029-0 | 9 | Z-5-12362-003-1 | 3 | Z-5-15619-025-0 | 31 |
| Z-1-87811-798-0 | 1 | Z-5-09300-029-0 | 9 | Z-5-12524-077-0 | 34 | Z-5-15619-026-0 | 31 |
| Z-1-87811-798-0 | 3 | Z-5-09300-029-0 | 9 | Z-5-12535-001-1 | 8 | Z-5-15619-027-0 | 31 |
| Z-1-87811-887-1 | 1 | Z-5-09300-029-0 | 10 | Z-5-12563-001-0 | 8 | Z-5-15619-034-0 | 31 |
| Z-1-87811-887-1 | 2 | Z-5-09333-035-0 | 5 | Z-5-12565-006-0 | 8 | Z-5-15619-035-0 | 31 |
| Z-1-87811-887-1 | 4 | Z-5-09360-978-0 | 2 | Z-5-12571-003-2 | 8 | Z-5-15619-036-0 | 31 |
| Z-1-87811-887-1 | 5 | Z-5-09580-092-0 | 24 | Z-5-12628-012-0 | 8 | Z-5-15619-037-0 | 31 |
| Z-1-87811-887-1 | 6 | Z-5-09580-098-0 | 15 | Z-5-13121-005-0 | 15 | Z-5-15619-039-0 | 31 |
| Z-1-87811-887-1 | 7 | Z-5-09600-013-0 | 7 | Z-5-13125-001-0 | 15 | Z-5-15619-039-0 | 31 |
| Z-1-87811-887-1 | 14 | Z-5-09605-008-0 | 11 | Z-5-13165-004-0 | 15 | Z-5-15619-041-0 | 31 |
| Z-1-87811-887-1 | 18 | Z-5-09605-017-0 | 24 | Z-5-13219-020-0 | 27 | Z-5-15619-044-0 | 31 |
| Z-1-87811-887-1 | 22 | Z-5-09605-018-0 | 1 | Z-5-13219-021-0 | 27 | Z-5-15619-048-0 | 34 |
| Z-1-87811-887-1 | 23 | Z-5-09623-002-0 | 6 | Z-5-13311-119-0 | 14 | Z-5-15619-049-0 | 31 |
| Z-1-87811-887-1 | 24 | Z-5-09623-024-0 | 16 | Z-5-13311-119-0 | 14 | Z-5-15619-106-0 | 31 |
| Z-1-87811-887-1 | 25 | Z-5-09623-024-0 | 17 | Z-5-13311-205-0 | 14 | Z-5-15619-107-0 | 31 |
| Z-1-87811-887-2 | 11 | Z-5-09623-035-0 | 1 | Z-5-13311-208-0 | 14 | Z-5-15619-108-0 | 31 |
| Z-1-87811-888-0 | 1 | Z-5-09623-060-0 | 8 | Z-5-13612-007-1 | 22 | Z-5-15619-109-0 | 31 |

# PARTS NUMBER INDEX 部品番号索引表

| 部品番号 PART No. | 図番号 FIG.NO. | 部品番号 PART No. | 図番号 FIG.NO. | 部品番号 PART No. | 図番号 FIG.NO. | 部品番号 PART No. | 図番号 FIG.NO. |
|---|---|---|---|---|---|---|---|
| Z-5-15619-110-0 | 31 | Z-5-15751-012-0 | 33 | Z-5-81129-160-0 | 36 | Z-8-94370-670-0 | 17A |
| Z-5-15619-136-0 | 31 | Z-5-15754-001-0 | 33 | Z-5-81129-160-0 | 39 | Z-8-94370-670-0 | 18 |
| Z-5-15619-156-0 | 31 | Z-5-15781-003-0 | 34 | Z-5-81129-214-0 | 36 | Z-8-94370-671-0 | 4 |
| Z-5-15621-025-0 | 31 | Z-5-19381-001-3 | 7 | Z-5-81129-214-0 | 39 | Z-8-94370-672-0 | 4 |
| Z-5-15625-001-0 | 31 | Z-5-19619-049-0 | 31 | Z-5-81151-036-0 | 36 | Z-8-94370-675-0 | 29 |
| Z-5-15629-015-0 | 31 | Z-5-19619-049-0 | 32 | Z-5-81151-036-0 | 39 | Z-8-94370-675-0 | 30 |
| Z-5-15629-015-0 | 31 | Z-5-19711-031-2 | 35 | Z-5-81229-192-0 | 40 | Z-8-94371-853-2 | 4 |
| Z-5-15629-016-0 | 31 | Z-5-19732-001-2 | 43 | Z-5-82410-012-2 | 43 | Z-8-94393-132-0 | 3 |
| Z-5-15629-016-0 | 31 | Z-5-19732-002-2 | 43 | Z-5-83539-024-0 | 31 | Z-8-94393-132-0 | 3 |
| Z-5-15629-017-0 | 31 | Z-5-19751-004-2 | 29 | Z-8-09160-508-0 | 11 | Z-8-94393-132-0 | 3 |
| Z-5-15629-017-0 | 31 | Z-5-19751-004-2 | 30 | Z-8-91325-397-0 | 32 | Z-8-94404-610-0 | 9 |
| Z-5-15629-018-0 | 31 | Z-5-19751-050-0 | 31 | Z-8-94107-575-1 | 3 | Z-8-94404-610-0 | 10 |
| Z-5-15629-018-0 | 31 | Z-5-19789-003-0 | 29 | Z-8-94107-713-2 | 14 | Z-8-94404-610-0 | 11 |
| Z-5-15629-019-0 | 31 | Z-5-19789-003-0 | 30 | Z-8-94110-111-0 | 7 | Z-8-94416-377-0 | 27 |
| Z-5-15629-019-0 | 31 | Z-5-51339-003-0 | 28 | Z-8-94114-579-0 | 8 | Z-8-94434-075-0 | 20 |
| Z-5-15629-020-0 | 31 | Z-5-81117-019-0 | 39A | Z-8-94133-937-3 | 8 | Z-8-94453-746-0 | 27 |
| Z-5-15629-020-0 | 31 | Z-5-81118-013-0 | 38 | Z-8-94133-937-3 | 8 | Z-8-94457-517-0 | 34 |
| Z-5-15629-038-0 | 31 | Z-5-81118-019-0 | 36 | Z-8-94137-682-0 | 2 | Z-8-94457-910-2 | 4 |
| Z-5-15629-038-0 | 31 | Z-5-81118-019-0 | 39 | Z-8-94144-588-0 | 31 | Z-8-94483-894-0 | 20 |
| Z-5-15629-045-0 | 31 | Z-5-81119-012-0 | 37 | Z-8-94144-588-0 | 32 | Z-8-94483-897-1 | 20 |
| Z-5-15629-049-0 | 31 | Z-5-81122-016-0 | 36 | Z-8-94148-079-0 | 1 | Z-8-97015-754-1 | 1 |
| Z-5-15629-090-0 | 31 | Z-5-81122-016-0 | 39 | Z-8-94148-617-1 | 16 | Z-8-97016-147-1 | 28 |
| Z-5-15629-090-0 | 31 | Z-5-81123-018-0 | 38 | Z-8-94148-617-1 | 16A | Z-8-97016-147-1 | 28 |
| Z-5-15637-003-0 | 31 | Z-5-81124-004-0 | 38 | Z-8-94148-617-1 | 17 | Z-8-97022-098-0 | 28 |
| Z-5-15639-002-0 | 31 | Z-5-81127-013-0 | 37 | Z-8-94148-617-1 | 17A | Z-8-97022-216-0 | 4 |
| Z-5-15643-001-0 | 31 | Z-5-81129-092-0 | 38 | Z-8-94148-617-1 | 18 | Z-8-97023-339-0 | 1 |
| Z-5-15643-009-0 | 31 | Z-5-81129-119-0 | 38 | Z-8-94148-617-1 | 18 | Z-8-97024-238-0 | 32 |
| Z-5-15644-017-0 | 31 | Z-5-81129-120-0 | 38 | Z-8-94148-617-1 | 19 | Z-8-97024-239-0 | 32 |
| Z-5-15719-008-0 | 32 | Z-5-81129-121-0 | 38 | Z-8-94149-756-0 | 31 | Z-8-97024-240-0 | 32 |
| Z-5-15721-004-0 | 32 | Z-5-81129-126-0 | 38 | Z-8-94152-613-0 | 6 | Z-8-97026-750-0 | 31 |
| Z-5-15721-020-0 | 32 | Z-5-81129-127-0 | 38 | Z-8-94162-568-0 | 2 | Z-8-97027-601-1 | 4 |
| Z-5-15721-022-0 | 32 | Z-5-81129-128-0 | 38 | Z-8-94162-568-0 | 2 | Z-8-97028-525-0 | 2 |
| Z-5-15721-026-0 | 32 | Z-5-81129-130-0 | 38 | Z-8-94164-027-0 | 11 | Z-8-97028-525-0 | 2 |
| Z-5-15722-008-0 | 32 | Z-5-81129-134-0 | 38 | Z-8-94167-793-0 | 32 | Z-8-97030-285-1 | 25 |
| Z-5-15723-088-0 | 32 | Z-5-81129-136-0 | 38 | Z-8-94167-793-0 | 32 | Z-8-97030-285-1 | 28 |
| Z-5-15723-128-0 | 32 | Z-5-81129-142-0 | 36 | Z-8-94169-502-0 | 28 | Z-8-97030-404-0 | 37 |
| Z-5-15723-160-0 | 32 | Z-5-81129-144-0 | 36 | Z-8-94169-503-0 | 28 | Z-8-97039-537-0 | 32 |
| Z-5-15725-042-0 | 32 | Z-5-81129-144-0 | 39 | Z-8-94170-486-0 | 9 | Z-8-97041-664-0 | 31 |
| Z-5-15725-050-0 | 32 | Z-5-81129-145-0 | 36 | Z-8-94171-110-0 | 31 | Z-8-97047-604-0 | 43 |
| Z-5-15725-057-0 | 32 | Z-5-81129-145-0 | 39 | Z-8-94171-185-0 | 33 | Z-8-97063-823-0 | 32 |
| Z-5-15725-122-0 | 32 | Z-5-81129-146-0 | 36 | Z-8-94171-853-0 | 38 | Z-8-97069-902-1 | 20 |
| Z-5-15729-027-0 | 32 | Z-5-81129-146-0 | 39 | Z-8-94173-054-0 | 41 | Z-8-97072-823-1 | 5 |
| Z-5-15729-027-0 | 32 | Z-5-81129-147-0 | 36 | Z-8-94173-060-0 | 41 | Z-8-97083-337-0 | 31 |
| Z-5-15729-027-0 | 32 | Z-5-81129-148-0 | 36 | Z-8-94173-061-0 | 41 | Z-8-97085-022-0 | 32 |
| Z-5-15729-027-0 | 32 | Z-5-81129-148-0 | 39 | Z-8-94205-986-1 | 24 | Z-8-97120-167-0 | 7 |
| Z-5-15729-027-0 | 32 | Z-5-81129-149-0 | 36 | Z-8-94235-157-0 | 2 | Z-8-97137-910-1 | 3 |
| Z-5-15729-033-0 | 32 | Z-5-81129-149-0 | 39 | Z-8-94316-991-0 | 10 | Z-8-97137-910-1 | 3 |
| Z-5-15729-034-0 | 32 | Z-5-81129-150-0 | 36 | Z-8-94320-308-0 | 28 | Z-8-97138-003-2 | 23 |
| Z-5-15729-053-0 | 32 | Z-5-81129-150-0 | 39 | Z-8-94340-192-0 | 7 | Z-8-97138-086-0 | 23 |
| Z-5-15729-054-0 | 32 | Z-5-81129-151-0 | 36 | Z-8-94340-192-0 | 7 | Z-8-97138-086-0 | 23 |
| Z-5-15729-071-0 | 32 | Z-5-81129-151-0 | 39 | Z-8-94364-869-2 | 5 | Z-8-97138-086-0 | 23 |
| Z-5-15729-099-0 | 32 | Z-5-81129-155-0 | 36 | Z-8-94367-368-1 | 2 | Z-8-97138-534-0 | 32 |
| Z-5-15729-102-0 | 32 | Z-5-81129-155-0 | 39 | Z-8-94367-530-1 | 2 | Z-8-97138-534-0 | 32 |
| Z-5-15729-123-0 | 32 | Z-5-81129-156-0 | 36 | Z-8-94367-530-1 | 2 | Z-8-97138-534-0 | 32 |
| Z-5-15729-123-0 | 32 | Z-5-81129-156-0 | 39 | Z-8-94370-661-0 | 21 | Z-8-97138-535-0 | 32 |
| Z-5-15729-124-0 | 32 | Z-5-81129-156-0 | 39A | Z-8-94370-661-0 | 22 | Z-8-97146-824-0 | 31 |
| Z-5-15729-167-0 | 32 | Z-5-81129-158-0 | 36 | Z-8-94370-663-0 | 14 | Z-8-97179-670-0 | 32 |
| Z-5-15729-209-0 | 32 | Z-5-81129-158-0 | 39 | Z-8-94370-670-0 | 16 | Z-8-97182-729-0 | 42 |
| Z-5-15729-286-0 | 32 | Z-5-81129-159-0 | 36 | Z-8-94370-670-0 | 16A | Z-8-97182-740-0 | 42 |
| Z-5-15729-287-0 | 32 | Z-5-81129-159-0 | 39 | Z-8-94370-670-0 | 17 | Z-8-97224-204-0 | 23 |

# PARTS NUMBER INDEX 部品番号索引表

| 部品番号 PART No. | 図番号 FIG.NO. | 部品番号 PART No. | 図番号 FIG.NO. | 部品番号 PART No. | 図番号 FIG.NO. | 部品番号 PART No. | 図番号 FIG.NO. |
|---|---|---|---|---|---|---|---|
| Z-8-97224-204-0 | 23 | Z-9-0911-0408-0 | 11 | Z-9-0915-0512-0 | 35 | Z-9-0957-1416-0 | 23 |
| Z-8-97224-205-0 | 2 | Z-9-0911-0408-0 | 11 | Z-9-0915-0512-0 | 35 | Z-9-0957-1424-0 | 6 |
| Z-8-97226-649-0 | 37 | Z-9-0911-0408-0 | 25 | Z-9-0915-0514-0 | 13 | Z-9-0957-2008-0 | 2 |
| Z-8-97226-650-0 | 37 | Z-9-0911-0410-0 | 9 | Z-9-0915-0514-0 | 35 | Z-9-0957-2008-0 | 30 |
| Z-8-97226-651-0 | 37 | Z-9-0911-0410-0 | 11 | Z-9-0915-0514-0 | 43 | Z-9-0957-2010-0 | 16 |
| Z-8-97226-655-0 | 37 | Z-9-0911-0410-0 | 26 | Z-9-0915-0514-0 | 43 | Z-9-0957-2010-0 | 16A |
| Z-8-97226-673-0 | 37 | Z-9-0911-0410-0 | 29 | Z-9-0915-0610-0 | 31 | Z-9-0957-2010-0 | 17 |
| Z-8-97233-301-0 | 4 | Z-9-0911-0410-0 | 30 | Z-9-0916-0506-0 | 29 | Z-9-0957-2010-0 | 17 |
| Z-8-97235-788-1 | 9 | Z-9-0911-0508-0 | 2 | Z-9-0916-0508-0 | 2 | Z-9-0957-2010-0 | 17 |
| Z-8-97235-788-1 | 10 | Z-9-0911-0508-0 | 6 | Z-9-0916-0508-0 | 4 | Z-9-0957-2010-0 | 17A |
| Z-8-97235-788-1 | 11 | Z-9-0911-0508-0 | 6 | Z-9-0916-0508-0 | 6 | Z-9-0957-2010-0 | 18 |
| Z-8-97235-789-1 | 23 | Z-9-0911-0510-0 | 27 | Z-9-0916-0508-0 | 6 | Z-9-0957-2010-0 | 18 |
| Z-8-97249-895-1 | 21 | Z-9-0911-0510-0 | 43 | Z-9-0916-0508-0 | 9 | Z-9-0957-2010-0 | 18 |
| Z-8-97249-895-1 | 21 | Z-9-0911-1410-0 | 24 | Z-9-0916-0508-0 | 9 | Z-9-0957-2014-0 | 1 |
| Z-8-97250-574-0 | 37 | Z-9-0911-1508-0 | 8 | Z-9-0916-0508-0 | 10 | Z-9-0957-2014-0 | 1 |
| Z-8-97253-362-1 | 23 | Z-9-0912-0410-0 | 13 | Z-9-0916-0508-0 | 10 | Z-9-0957-5208-0 | 7 |
| Z-9-00090-677-0 | 31 | Z-9-0915-0506-0 | 32 | Z-9-0916-0508-0 | 11 | Z-9-09602-148-0 | 8 |
| Z-9-00090-677-0 | 31 | Z-9-0915-0506-0 | 43 | Z-9-0916-0508-0 | 24 | Z-9-09630-026-0 | 7 |
| Z-9-00813-023-0 | 32 | Z-9-0915-0506-0 | 43 | Z-9-0916-0508-0 | 29 | Z-9-09630-026-0 | 7 |
| Z-9-00813-023-0 | 32 | Z-9-0915-0508-0 | 2 | Z-9-0916-0508-0 | 30 | Z-9-09651-069-0 | 5 |
| Z-9-0105-6045-0 | 22 | Z-9-0915-0508-0 | 6 | Z-9-0916-0508-0 | 30 | Z-9-09660-034-0 | 7 |
| Z-9-0190-0614-0 | 31 | Z-9-0915-0508-0 | 6 | Z-9-0916-0510-0 | 16 | Z-9-09661-005-0 | 23 |
| Z-9-0190-0616-0 | 32 | Z-9-0915-0508-0 | 7 | Z-9-0916-0510-0 | 17 | Z-9-09661-005-0 | 23 |
| Z-9-0190-0616-0 | 32 | Z-9-0915-0508-0 | 9 | Z-9-0916-0510-0 | 18 | Z-9-09662-007-0 | 34 |
| Z-9-0190-0616-0 | 32 | Z-9-0915-0508-0 | 9 | Z-9-0916-0510-0 | 19 | Z-9-09662-012-0 | 6 |
| Z-9-0190-0616-0 | 32 | Z-9-0915-0508-0 | 9 | Z-9-0916-0510-0 | 23 | Z-9-09662-034-0 | 23 |
| Z-9-0190-0818-0 | 32 | Z-9-0915-0508-0 | 9 | Z-9-0916-0510-0 | 26 | Z-9-09664-005-0 | 23 |
| Z-9-0190-0822-0 | 22 | Z-9-0915-0508-0 | 10 | Z-9-0916-0514-0 | 35 | Z-9-09715-067-0 | 2 |
| Z-9-0206-1022-0 | 43 | Z-9-0915-0508-0 | 10 | Z-9-0916-0710-0 | 29 | Z-9-09715-098-0 | 16 |
| Z-9-0206-1028-0 | 43 | Z-9-0915-0508-0 | 11 | Z-9-0916-0710-0 | 29 | Z-9-09715-098-0 | 16A |
| Z-9-0309-0820-0 | 21 | Z-9-0915-0508-0 | 11 | Z-9-0916-0710-0 | 29 | Z-9-09715-098-0 | 17 |
| Z-9-0349-0610-0 | 20 | Z-9-0915-0508-0 | 11 | Z-9-0916-0710-0 | 29 | Z-9-09716-114-0 | 14 |
| Z-9-0392-0614-0 | 29 | Z-9-0915-0508-0 | 11 | Z-9-0916-0710-0 | 30 | Z-9-09800-928-1 | 16 |
| Z-9-0401-0828-0 | 11 | Z-9-0915-0508-0 | 20 | Z-9-0916-0710-0 | 30 | Z-9-09800-928-1 | 16A |
| Z-9-0410-1030-0 | 31 | Z-9-0915-0508-0 | 25 | Z-9-0916-0710-0 | 30 | Z-9-09800-928-1 | 17 |
| Z-9-0411-0825-0 | 7 | Z-9-0915-0508-0 | 29 | Z-9-0916-0712-0 | 35 | Z-9-09800-928-1 | 17A |
| Z-9-0411-0825-0 | 7 | Z-9-0915-0508-0 | 30 | Z-9-0916-4010-0 | 10 | Z-9-09800-928-1 | 18 |
| Z-9-0411-0825-0 | 7 | Z-9-0915-0508-0 | 30 | Z-9-0916-4510-0 | 24 | Z-9-09801-334-0 | 3 |
| Z-9-0441-1025-0 | 9 | Z-9-0915-0510-0 | 2 | Z-9-0916-4510-0 | 31 | Z-9-09802-539-0 | 25 |
| Z-9-0441-1025-0 | 11 | Z-9-0915-0510-0 | 8 | Z-9-0916-4514-0 | 13 | Z-9-09830-078-0 | 7 |
| Z-9-0441-1028-0 | 9 | Z-9-0915-0510-0 | 9 | Z-9-0916-4608-0 | 2 | Z-9-09830-163-0 | 7 |
| Z-9-0441-1028-0 | 10 | Z-9-0915-0510-0 | 11 | Z-9-0916-4708-0 | 20 | Z-9-09840-107-1 | 3 |
| Z-9-0441-1028-0 | 11 | Z-9-0915-0510-0 | 13 | Z-9-0916-4708-0 | 20 | Z-9-09842-007-0 | 10 |
| Z-9-0441-1030-0 | 9 | Z-9-0915-0510-0 | 17A | Z-9-0918-0019-0 | 8 | Z-9-09844-022-0 | 14 |
| Z-9-0441-1030-0 | 10 | Z-9-0915-0510-0 | 19 | Z-9-0918-0147-0 | 22 | Z-9-09844-565-0 | 9 |
| Z-9-0441-1030-0 | 11 | Z-9-0915-0510-0 | 19 | Z-9-0918-0152-0 | 21 | Z-9-09851-430-0 | 8 |
| Z-9-0473-1025-0 | 10 | Z-9-0915-0510-0 | 19 | Z-9-0918-0152-0 | 21 | Z-9-09851-430-0 | 8 |
| Z-9-0803-0713-0 | 8 | Z-9-0915-0510-0 | 22 | Z-9-0918-0152-0 | 22 | Z-9-09851-431-0 | 3 |
| Z-9-0810-4030-0 | 15 | Z-9-0915-0510-0 | 23 | Z-9-0918-5404-0 | 32 | Z-9-09851-649-0 | 9 |
| Z-9-0811-1612-0 | 29 | Z-9-0915-0510-0 | 25 | Z-9-0918-5415-0 | 32 | Z-9-09851-649-0 | 11 |
| Z-9-0815-1018-0 | 1 | Z-9-0915-0510-0 | 26 | Z-9-0952-4555-0 | 25 | Z-9-09851-850-3 | 8 |
| Z-9-0815-1018-0 | 4 | Z-9-0915-0510-0 | 27 | Z-9-0956-2215-0 | 16A | Z-9-09851-934-0 | 29 |
| Z-9-0815-1022-0 | 3 | Z-9-0915-0510-0 | 29 | Z-9-0956-2215-0 | 17A | Z-9-09851-934-0 | 30 |
| Z-9-0815-1220-0 | 3 | Z-9-0915-0510-0 | 29 | Z-9-0956-2215-0 | 24 | Z-9-09860-019-0 | 1 |
| Z-9-0911-0408-0 | 6 | Z-9-0915-0510-0 | 29 | Z-9-0957-1410-0 | 4 | Z-9-09902-238-0 | 43 |
| Z-9-0911-0408-0 | 7 | Z-9-0915-0510-0 | 30 | Z-9-0957-1410-0 | 14 | Z-9-09912-976-1 | 6 |
| Z-9-0911-0408-0 | 9 | Z-9-0915-0510-0 | 30 | Z-9-0957-1412-0 | 1 | Z-9-09914-701-0 | 1 |
| Z-9-0911-0408-0 | 9 | Z-9-0915-0510-0 | 43 | Z-9-0957-1414-0 | 1 | Z-9-09914-701-0 | 16 |
| Z-9-0911-0408-0 | 10 | Z-9-0915-0510-0 | 43 | Z-9-0957-1416-0 | 4 | Z-9-09914-701-0 | 16A |
| Z-9-0911-0408-0 | 10 | Z-9-0915-0510-0 | 43 | Z-9-0957-1416-0 | 23 | Z-9-09914-701-0 | 17 |

# PARTS NUMBER INDEX 部品番号索引表


| 部品番号 PART No. | 図番号 FIG.NO. | 部品番号 PART No. | 図番号 FIG.NO. | 部品番号 PART No. | 図番号 FIG.NO. | 部品番号 PART No. | 図番号 FIG.NO. |
|---|---|---|---|---|---|---|---|
| Z-9-09915-281-1 | 2 | Z-9-8122-2220-0 | 31 | Z-9-8221-5867-0 | 41 | | |
| Z-9-09915-553-1 | 6 | Z-9-8122-5033-0 | 31 | Z-9-8251-3928-9 | 43 | | |
| Z-9-09915-666-1 | 2 | Z-9-8122-5033-0 | 31 | Z-9-8293-1743-0 | 16 | | |
| Z-9-09916-755-0 | 43 | Z-9-8122-5043-0 | 31 | Z-9-8293-1743-0 | 17 | | |
| Z-9-09916-755-0 | 43 | Z-9-8122-5047-0 | 31 | Z-9-8293-2211-0 | 35 | | |
| Z-9-09917-105-1 | 14 | Z-9-8122-5047-0 | 31 | Z-9-8441-0027-0 | 32 | | |
| Z-9-09920-526-0 | 16 | Z-9-8122-5049-0 | 31 | Z-9-8441-0027-0 | 32 | | |
| Z-9-09920-526-0 | 17 | Z-9-8122-5050-0 | 31 | Z-9-8841-0027-0 | 32 | | |
| Z-9-09921-188-0 | 14 | Z-9-8122-5051-0 | 31 | Z-9-8841-0037-0 | 32 | | |
| Z-9-09952-143-0 | 21 | Z-9-8122-5052-0 | 31 | Z-9-8841-0066-0 | 31 | | |
| Z-9-09952-143-0 | 22 | Z-9-8122-5053-0 | 31 | Z-9-8841-0264-0 | 34 | | |
| Z-9-11129-128-0 | 7 | Z-9-8122-5054-0 | 31 | Z-9-8841-0502-0 | 34 | | |
| Z-9-11129-601-0 | 7 | Z-9-8122-5057-0 | 31 | Z-9-9106-6450-0 | 5 | | |
| Z-9-11175-011-0 | 7 | Z-9-8122-5058-0 | 31 | Z-9-9106-6465-0 | 5 | | |
| Z-9-11179-030-0 | 7 | Z-9-8122-5059-0 | 31 | Z-9-9206-1428-0 | 8 | | |
| Z-9-11179-105-0 | 7 | Z-9-8123-1523-0 | 31 | Z-9-9206-1638-0 | 3 | | |
| Z-9-11224-602-1 | 1 | Z-9-8123-5003-0 | 31 | Z-9-9349-0510-0 | 7 | | |
| Z-9-11229-058-1 | 4 | Z-9-8123-5015-0 | 31 | Z-9-9441-1235-0 | 5 | | |
| Z-9-11229-070-0 | 6 | Z-9-8123-5017-0 | 31 | Z-9-9911-0412-0 | 35 | | |
| Z-9-11291-605-1 | 2 | Z-9-8123-5021-0 | 31 | Z-9-9911-0412-0 | 35 | | |
| Z-9-11611-048-0 | 1 | Z-9-8123-5042-0 | 31 | Z-9-9911-0414-0 | 5 | | |
| Z-9-11613-035-0 | 1 | Z-9-8123-5043-0 | 31 | Z-9-9911-0414-0 | 35 | | |
| Z-9-11681-015-0 | 8 | Z-9-8123-5044-0 | 31 | Z-9-9920-2312-0 | 1 | | |
| Z-9-11777-612-1 | 43 | Z-9-8123-5045-0 | 31 | Z-9-9920-2314-0 | 1 | | |
| Z-9-11777-622-1 | 43 | Z-9-8123-5046-0 | 31 | 01103-08060 | 20 | | |
| Z-9-12211-604-1 | 3 | Z-9-8131-5065-0 | 32 | 20801-0Z131 | 7 | | |
| Z-9-12271-608-0 | 3 | Z-9-8132-1205-0 | 32 | 20801-01251 | 19 | | |
| Z-9-12273-608-0 | 3 | Z-9-8132-2235-0 | 32 | 20801-01391 | 16 | | |
| Z-9-12274-608-0 | 3 | Z-9-8132-5030-0 | 32 | 20801-01391 | 17 | | |
| Z-9-12333-607-0 | 3 | Z-9-8132-5062-0 | 32 | 20801-01441 | 18 | | |
| Z-9-12333-607-0 | 3 | Z-9-8132-5086-0 | 32 | 20801-02171 | 26 | | |
| Z-9-12333-607-0 | 3 | Z-9-8132-5088-0 | 32 | 20801-04051 | 20 | | |
| Z-9-12379-045-0 | 3 | Z-9-8132-5097-0 | 32 | 530C2-72101 | 35 | | |
| Z-9-12521-043-0 | 3 | Z-9-8132-5173-0 | 32 | 530C2-72101 | 40 | | |
| Z-9-12531-030-0 | 8 | Z-9-8132-5177-0 | 32 | 530C2-72111 | 35 | | |
| Z-9-12616-042-0 | 8 | Z-9-8132-5182-0 | 32 | 530C2-72121 | 35 | | |
| Z-9-12626-005-0 | 8 | Z-9-8132-5210-0 | 32 | 530C2-72131 | 35 | | |
| Z-9-12628-105-0 | 8 | Z-9-8132-5391-0 | 32 | 530C6-62101 | 20 | | |
| Z-9-13119-010-0 | 15 | Z-9-8132-5429-0 | 32 | | | | |
| Z-9-13226-011-0 | 16 | Z-9-8132-5488-0 | 32 | | | | |
| Z-9-13226-011-0 | 16 | Z-9-8132-5551-0 | 32 | | | | |
| Z-9-13226-011-0 | 16A | Z-9-8132-5552-0 | 32 | | | | |
| Z-9-13263-010-0 | 17A | Z-9-8132-5553-0 | 32 | | | | |
| Z-9-13263-010-0 | 24 | Z-9-8132-6112-0 | 32 | | | | |
| Z-9-13612-802-0 | 21 | Z-9-8135-1205-0 | 33 | | | | |
| Z-9-13613-613-0 | 21 | Z-9-8135-1302-0 | 33 | | | | |
| Z-9-13621-802-0 | 21 | Z-9-8135-1403-0 | 33 | | | | |
| Z-9-13621-802-0 | 22 | Z-9-8135-1406-0 | 33 | | | | |
| Z-9-14141-276-1 | 9 | Z-9-8135-1410-0 | 33 | | | | |
| Z-9-14149-653-0 | 9 | Z-9-8135-1416-0 | 33 | | | | |
| Z-9-15339-051-0 | 25 | Z-9-8135-1702-0 | 33 | | | | |
| Z-9-15347-003-0 | 28 | Z-9-8135-5025-0 | 33 | | | | |
| Z-9-15419-612-0 | 25 | Z-9-8135-5035-0 | 33 | | | | |
| Z-9-15419-613-0 | 25 | Z-9-8139-1906-0 | 32 | | | | |
| Z-9-15419-614-0 | 25 | Z-9-8139-1907-0 | 32 | | | | |
| Z-9-8112-9022-0 | 39 | Z-9-8211-6140-0 | 36 | | | | |
| Z-9-8121-5115-0 | 31 | Z-9-8211-6140-0 | 39 | | | | |
| Z-9-8121-5144-0 | 31 | Z-9-8211-6142-0 | 36 | | | | |
| Z-9-8121-5185-0 | 31 | Z-9-8211-6142-0 | 39 | | | | |
| Z-9-8122-1223-0 | 31 | Z-9-8221-5867-0 | 40 | | | | |

No.PE-A-6BG1QCG

1995年９月　発行
1998年３月　改訂
1998年７月　改訂
1998年８月　改訂
1999年６月　改訂
1999年７月　改訂
2003年12月　改訂

TCM株式会社
本　社　大阪市西区京町堀１－１５－１０
発　行　ＴＣＭテクノ株式会社

ISSUED : September, 1995
REVISED : March, 1998
REVISED : July, 1998
REVISED : August, 1998
REVISED : June, 1999
REVISED : July, 1999
REVISED : December, 2003

TCM CORPORATION
INTERNATIONAL MARKETING DIVISION: 1-15-5, Nishi-shimbashi, Minato-ku, Tokyo
105-0003, Japan
FAX: Japan +81-3-35918152, 3-35918153

無断で転載・複製を禁ず
All rights reserved.

I-0312003(H) Printed in Japan

TCM株式会社